Printed on 1/10/2006

National Transportation Safety Board FACTUAL REPORT AVIATION	NTSB ID: ATL04FA038	Aircraft Registration Number: N4482S
	Occurrence Date: 11/21/2003	Most Critical Injury: Fatal
	Occurrence Type: Accident	Investigated By: NTSB

Location/Time

Nearest City/Place	State	Zip Code	Local Time	Time Zone
Griffin	GA	30224	1245	EST

Airport Proximity: Off Airport/Airstrip	Distance From Landing Facility: 1	Direction From Airport: 290

Aircraft Information Summary

Aircraft Manufacturer	Model/Series	Type of Aircraft
Beech	55	Airplane

Sightseeing Flight: No **Air Medical Transport Flight:** No

Narrative

Brief narrative statement of facts, conditions and circumstances pertinent to the accident/incident:

HISTORY OF FLIGHT

On November 21, 2003, at 1245 eastern standard time, a Beech Baron 55, N4482S, registered and operated by River Chase Development Aviation Co. collided with a building during climb-out at Spaulding County Airport, Griffin, Georgia. Visual meteorological conditions prevailed at the time of the accident and no flight plan was filed. The airplane was substantially damaged and the pilot was fatally injured. The flight departed Spaulding County Airport on November 21, 2003 at 1240.

According to the company's chief maintenance inspector, the purpose of the flight was to conduct a maintenance test flight of the airplane on recently installed equipment the pilot/ mechanic had just completed. Before engine start-up the pilot/ mechanic conducted a pre-flight of the airplane, and then taxied out to the ramp and ran the engine up to full rpm three consecutive times before the test flight. The pilot taxied to runway 32, and proceeded to add full power for take-off. As the airplane began to rotate for climb out the engines sounded like they began to "backfire". The engines continued to make this sound as it climbed out. The airplane climbed approximately 200 feet and the left wing pitch down. The airplane descended under the tree line and a "loud explosion" was heard.

According to other witnesses, as the airplane flew overhead the engines sounded as though they were "sputtering" as it climbed out. The airplane began to roll into a left bank, and descended below the tree line. Shortly after a "loud explosion" was heard.

There was no distress call heard from the pilot at time of the accident. The airplane collided with building mile from the departure end of runway 32.

PERSONNEL INFORMATION

Review of pilot records revealed the pilot was issued a commercial pilot certificate on May 14, 1982, with ratings for airplane single-engine land, multiengine land, instrument airplane, and glider aero tow. Review of records revealed the pilot held an aircraft mechanic certificate with ratings for airframe and power plant. The pilot held a second-class medical certificate issued on April 22, 2003, valid when wearing corrective lenses. Review of the pilot experience form indicated that the pilot accumulated a total of 2,500 flight hours. The pilot's logbook was not recovered for review.

(Continued on next page)

Narrative (Continued)

AIRCRAFT INFORMATION

Review of airplane logbooks indicated the last recorded annual inspection was conducted on November 04, 2002; the total tachometer time was 1690. The altimeter system, static pressure system, and transponder were inspected on April 24, 2001 and were found in compliance.

METEOROLOGICAL INFORMATION

The nearest weather reporting facility at the time of the accident was Macon, Georgia. The 1253 surface weather observation was: clear, visibility 10 miles, temperature 22 degrees Celsius, dew point temperature 04 degrees Celsius, winds calm, altimeter reading of 30.13.

WRECKAGE AND IMPACT INFORMATION

Examination of the wreckage site revealed, the airplane came to rest on top of a commercial building approximately mile from the end of runway 32. The wreckage debris path extended approximately 60 feet in length along the top of the roof. The initial point of impact was approximately 30 feet high at the edge of the commercial building. Approximately 30 feet along the wreckage debris path a vent duct displayed six propeller slash marks followed by a hole in the roof of the building where the right engine came to rest. Approximately 25 feet forward of the propeller damaged vent duct the airplane fuselage came to rest on the roof of the building. Wreckage debris was spread over an area of approximately 25 yards in diameter.

Post-accident examination of the cabin section of the airplane, and the main fuselage revealed that they were fire damaged. All flight control and communication instruments were fire damaged.

Post-accident examination of the right wing assembly revealed the right wing was connected to the fire damaged fuselage by the main spar. The outboard section of the right wing assembly was distorted aft. A six-foot section of the left wing assembly came to rest in the parking lot of the building. The left wing section was distorted and fire damaged. The left wingtip was located approximately 25 feet aft of the initial impact point. The left and right horizontal stabilizers, and vertical stabilizer were fire damaged. Flight control cables were fire damaged and located within the wreckage debris. Cable ends with the respective flight control cables were attached. The flight control chains for the elevator trim and control wheel interconnect chains were found intact.

Post-accident examination of the left engine revealed that it was fire damaged. The left propeller and crankshaft-mounting flange were broken free of the crankshaft. The crankshaft was turned through approximately 290-degrees of rotation. Gear and valve train continuity was confirmed. Compression and suction was obtained on all cylinders. The external examination of the left engine revealed that all external components were fire damage. Post-accident examination of the spark plus revealed that they were intact and the barrels were fire damaged. The top spark plug electrodes were normal when compared to the Champion Aviation Check-A-Plug.

Post-accident examination of the right engine revealed that the external components of the engine were intact, and sustained damage. The engine was examined, and it was determined that it would be prepared for a field test run. The engine was started and ran at idle. After warm up, the throttle was advanced to 1700 rpm and a magneto grounding check was performed. The throttle was advanced to full power, reduced to

(Continued on next page)

Narrative (Continued)

idle and shut down with the mixture. At the conclusion of the field test run the no mechanical anomalies were noted that would have prevented the engine from developing power prior to the accident. The engine was also test run at the factory test cell. Throughout the test phase, the engine accelerated normally without any hesitation, stumbling or interruption in power, and demonstrated the ability to produce rated horsepower. No mechanical anomalies were noted at the conclusion of the factory test run.

Post-accident examination of blades from both propeller assemblies revealed rotational scoring. Post-accident examination of the propellers revealed both propellers were rotating and not in the feathered position. There were no pre-impact mechanical anomalies noted with the propeller blades.

MEDICAL AND PATHOLOGICAL INFORMATION

The Division of Forensic Sciences Georgia Bureau of Investigation State of Georgia conducted postmortem examination of the pilot, on November 22, 2003. The cause of death was fire-related injuries including smoke inhalation. The Forensic Toxicology Research Section, Federal Aviation Administration, Oklahoma City, Oklahoma performed postmortem toxicology of specimens from the pilot. The results were negative for carbon monoxide, cyanide, and ethanol.

ADDITIONAL INFORMATION

Review of the Beechcraft Baron B55 pilot operating manual emergency procedures section states: After Engine failure on lift-off and in-flight; requires immediate pilot response of the following procedures in order to continue fight.

1. Landing Gear and Flaps- UP
2. Throttle (inoperative engine)- Closed
3. Propeller (inoperative engine)- Feather
4. Power (operative engine)- As Required
5. Airspeed- Maintain speed at engine failure (100 KTS (115 mph) max.) until obstacles are cleared.

Review of the maintenance work order revealed that a Shadin Digilfo-L fuel flow indicator and fuel flow transducers on the right and left engines were installed by the pilot/mechanic prior to the flight. The fuel flow transducers were installed in accordance with supplemental type certificate (STC) SA579GL and SE552GL.

Post examination of left fuel flow transducer serial number 130436 revealed it was charred, and the inlet hose coupler was not as tight as the outlet hose coupler. Fuel was poured into the inlet side of the transducer, and the outlet flow was restricted. The fitting on the inlet side was removed and the inlet was inspected. Debris was found around the inlet orifice. The debris was inspected and was similar to that of the connecting hose. After removing the debris from the Fuel flow transducer, fuel was again poured into the inlet and fuel exited the outlet without restriction to flow.

Post examination of the right fuel flow transducer serial number 130437 revealed it was intact with no visible damage, and both hose couplers were tight. Fuel was poured into the inlet side of the transducer, and the fuel exited the outlet side of the transducer without visible restriction to flow.

The wreckage of N4482S was released to International loss Management on July 2, 2004.

National Transportation Safety Board
FACTUAL REPORT
AVIATION

NTSB ID: ATL04FA038
Occurrence Date: 11/21/2003
Occurrence Type: Accident

Landing Facility/Approach Information

Airport Name	Airport ID:	Airport Elevation	Runway Used	Runway Length	Runway Width
Griffin Spalding Airport	6A2	Ft. MSL	32	3701	75

Runway Surface Type: Asphalt

Runway Surface Condition: Dry

Type Instrument Approach: NONE

VFR Approach/Landing: None

Aircraft Information

Aircraft Manufacturer	Model/Series	Serial Number
Beech	55	TC-1882

Airworthiness Certificate(s): Normal

Landing Gear Type: Retractable - Tricycle

Homebuilt Aircraft?	Number of Seats:	Certified Max Gross Wt.	Number of Engines:
No	6	4500 LBS	2

Engine Type:	Engine Manufacturer:	Model/Series:	Rated Power:
Reciprocating	Continental	IO-470L-21B	260 HP

- Aircraft Inspection Information

Type of Last Inspection	Date of Last Inspection	Time Since Last Inspection	Airframe Total Time
Annual	12/4/2002	90 Hours	1960 Hours

- Emergency Locator Transmitter (ELT) Information

ELT Installed?	ELT Operated?	ELT Aided in Locating Accident Site?
Yes	No	No

Owner/Operator Information

Registered Aircraft Owner	Street Address	City	State	Zip Code
River Chase Development Aviation Co.	30 Old Rudnick Ln	Dover	DE	19901

Operator of Aircraft	Street Address	City	State	Zip Code
River Chase Development Aviation Co.	30 Old Rudnick Ln.	Dover	DE	19901

Operator Does Business As:

Operator Designator Code:

- Type of U.S. Certificate(s) Held: None

Air Carrier Operating Certificate(s):

Operating Certificate:

Operator Certificate:

Regulation Flight Conducted Under: Part 91: General Aviation

Type of Flight Operation Conducted: Flight Test

National Transportation Safety Board
FACTUAL REPORT AVIATION

NTSB ID:	ATL04FA038
Occurrence Date:	11/21/2003
Occurrence Type:	Accident

First Pilot Information

Name	City	State	Date of Birth	Age
John R Bennaman	Fayetteville	GA	On File	47

Sex: M | Seat Occupied: Left | Principal Profession: Aircraft Mechanic | Certificate Number: On File

Certificate(s): Commercial

Airplane Rating(s): Multi-engine Land; Single-engine Land

Rotorcraft/Glider/LTA: Glider

Instrument Rating(s): Airplane

Instructor Rating(s): None

Type Rating/Endorsement for Accident/Incident Aircraft? No | Current Biennial Flight Review?

Medical Cert.: Class 2 | Medical Cert. Status: With Waivers/Limitations | Date of Last Medical Exam: 4/22/2003

- Flight Time Matrix	All A/C	This Make and Model	Airplane Single Engine	Airplane Mult-Engine	Night	Instrument Actual	Instrument Simulated	Rotorcraft	Glider	Lighter Than Air
Total Time	2500		1350		350	300	100			
Pilot In Command(PIC)										
Instructor										
Last 90 Days	50									
Last 30 Days										
Last 24 Hours										

Seatbelt Used? Yes | Shoulder Harness Used? Yes | Toxicology Performed? Yes | Second Pilot? No

Flight Plan/Itinerary

Type of Flight Plan Filed: None

Departure Point	State	Airport Identifier	Departure Time	Time Zone
Same as Accident/Incident Location		6A2	1240	EST

Destination	State	Airport Identifier
Same as Accident/Incident Location		6A2

Type of Clearance: VFR

Type of Airspace: Class E

Weather Information

Source of Briefing: Unknown

Method of Briefing: Unknown

National Transportation Safety Board
FACTUAL REPORT
AVIATION

NTSB ID:	ATL04FA038
Occurrence Date:	11/21/2003
Occurrence Type:	Accident

Weather Information

WOF ID	Observation Time	Time Zone	WOF Elevation	WOF Distance From Accident Site	Direction From Accident Site
FFC	1253	EST	808 Ft. MSL	10 NM	270 Deg. Mag.

Sky/Lowest Cloud Condition: Clear Ft. AGL | Condition of Light: Day

Lowest Ceiling: None Ft. AGL | Visibility: 10 SM | Altimeter: 30.13 "Hg

Temperature: 22 °C | Dew Point: 4 °C | Wind Direction: 0 | Density Altitude: 1635 Ft.

Wind Speed: Calm | Gusts: | Weather Condtions at Accident Site: Visual Conditions

Visibility (RVR): Ft. | Visibility (RVV) SM | Intensity of Precipitation:

Restrictions to Visibility: None

Type of Precipitation: None

Accident Information

Aircraft Damage: Destroyed | Aircraft Fire: Ground | Aircraft Explosion None

Classification: U.S. Registered/U.S. Soil

- Injury Summary Matrix	Fatal	Serious	Minor	None	TOTAL
First Pilot	1				1
Second Pilot					
Student Pilot					
Flight Instructor					
Check Pilot					
Flight Engineer					
Cabin Attendants					
Other Crew					
Passengers					
- TOTAL ABOARD -	1				1
Other Ground					
- GRAND TOTAL -	1				1

National Transportation Safety Board FACTUAL REPORT AVIATION	NTSB ID: ATL04FA038 Occurrence Date: 11/21/2003 Occurrence Type: Accident	

Administrative Information

Investigator-In-Charge (IIC)

Eric H Alleyne

Additional Persons Participating in This Accident/Incident Investigation:

Jose E. Gueits
Aviation Safety Inspector
Atlanta FSDO
1701 Columbia Ave.
College Park, GA 30337

Brain Cassidy

National Transportation Safety Board

Docket Contents

Project Information

Project ID (mkey)	Mode	
58382	Aviation	
NTSB Accident ID	Occurrence Date	Location
ATL04FA038	Nov 21, 2003	Griffin, GA, United States

Docket Information

Creation Date	Last Modified	Public Release Date & Time
Jul 20, 2004	May 31, 2005 17:13	May 31, 2005 17:15

Comments

List of Contents

Results 1 through 15 of 15
Total Pages 98/Photos 0

Document	Filing Date	Document Title	Pages	Photo
1	Oct 04, 2004	Engine Log- Left	5	
2	Oct 04, 2004	Engine Log- Right	9	
3	Oct 04, 2004	FAA Form 337 & STC Attachments	9	
4	Oct 04, 2004	Hartzell Propeller Report	11	
5	Oct 04, 2004	Inspection Report	2	
6	Oct 04, 2004	Propeller Log- Left	3	
7	Oct 04, 2004	Propeller Log- Right	5	
8	Oct 04, 2004	STC SA579GL	15	
9	Oct 04, 2004	STC SE443GL	16	
10	Oct 04, 2004	STC SE552GL	11	
11	Oct 04, 2004	Toxicological Report	1	
12	Oct 04, 2004	Witness Statements	4	
13	Oct 04, 2004	Work Order	4	
14	Oct 04, 2004	Release of Aircraft Wreckage, NTSB Form 6120.15	2	
15	May 31, 2005	Emergency Procedures	1	

LEFT

REBUILT ENGINE LOG

N44825

AIRCRAFT N NUMBER

IO470 L-21B

ENGINE MODEL NUMBER

297519R

ENGINE SERIAL NUMBER

USE ONLY FUEL CONFORMING TO ASTM D910.

USE OF AUTOMOTIVE GAS IS NOT APPROVED.

Crankshaft Serial B 773
10-27-94

ENGINE DESCRIPTION

Left Hand

TYPE Cont. MODEL IO470L SERIAL NO. 297519R

RATED H.P. _____ MAXIMUM H.P. _____

RATED R.P.M. _____ MAXIMUM R.P.M. _____ OIL PRESSURE _____

BORE _____ STROKE _____ DISPLACEMENT _____ CU. IN. _____

COMPRESSION RATIO _____ GEAR RATIO _____

PROPELLER _____ HUB DESIGN _____ HUB SERIAL NO. _____

BLADE DESIGN _____ BLADE SERIAL NO. _____ BLADE SERIAL NO. _____

IMUM HUB H.P. _____ MAXIMUM BLADE H.P. _____

PITCH _____ DIAMETER _____ LENGTH _____

OWNERS NAME _____

ADDRESS _____ CITY _____ STATE _____

DATE	R.P.M.		TIME ON GROUND		
	Ground	Air	Hrs.	Min.	T
1/10/95	Hobbs				
BROUGHT FORWARD					
TOTALS					

ENGINE LOG

ATE		SIGNATURE	LICENSE NUMBER
	TSMOH 0 Teledyne Continental IO-470-L S/N 297519-R CS 10/18/2002 Engine overhauled this date in accordance with Federal Aviation Administration Regulations, Manufacturer's Overhaul Manual and Parts Manual. New parts include: oil seals, cylinder base seals, gaskets, packings, circlips, lockplates, retaining rings, Crankshaft blade bushings, counterweight bushings, pistons (STD) R, piston rings, piston pins, rocker shafts, exhaust valves, exhaust valves, intake valves and seats (as needed), bearing inserts – rods and mains (STD), ball bearings, roller bearings, rubber couplings, cotter pins, lockwashers, and spark plugs. All steel magnifluxed by Aircraft Specialties – Tulsa, OK. All hardware plated by United Plating – Tulsa, OK. Crankshaft polished rods and mains (STD) and ultrasonic by Aircraft Specialties. Camshaft reground by Aircraft Specialties. Hydraulic Lifters reconditioned by Rock Aviation – Bourne, TX. Cylinders reworked and honed to a ring finish std steel bore. Magnetos overhauled. Fuel System overhauled by Mike's Fuel Metering – Tulsa, OK. Engine test run by Custom Airmotive – Tulsa, OK. Engine is approved for return to service. [redacted] Sky Tech International, Inc.		
BROUGI			

DATE	R.P.M.		TIME ON GROUND	
	Ground	Air	Hrs.	Min.
	GARDNER AVIATION SPE LOG ID# 937 04-Decemb N4482S S/N TC-1882 ENGINE AND PROPELLER WAS INTERNATIONAL. REINSTALLE PHC-C3YF-2UF SN:EB5395B. I CERTIFY THAT THIS ENGI DETERMINED TO BE IN AIRW [redacted] JOHN BENNAMAN			
BROUGHT FORWARD				
TOTALS				

AT

Sky-Tech International, Inc.
PO Box 912
Broken Arrow, Ok 74013

Customer Doug Turner W.O. No. 2409

Qty. 1 Type Teledyne Cont S/N 297519-RDS

Part Name Engine P/N 10-470-L

Work done Overhauled

[redacted]

Date 10/18/02 Inspected by [redacted]

SERVIEABLE PART

[illegible] Camshaft reground by Aircraft Specialties. Hydraulic Lifters reconditioned by Rock Aviation – Bourne, TX. Cylinders reworked and honed to a ring finish std steel bore. Magnetos overhauled. Fuel System overhauled by Mike's Fuel Metering – Tulsa, OK. Engine test run by Custom Airmotive – Tulsa, OK. Engine is approved for return to service.

[redacted]

Sky Tech International, Inc.

BROUG

SIGNATURE	LICENSE NUMBER

DATE	R.P.M.		TIME O GROUN	
	Ground	Air	Hrs.	Min.

GARDNER AVIATION SP
LOG ID# 937 04-Decem
N4482S S/N TC-1882

ENGINE AND PROPELLER WA
INTERNATIONAL. REINSTALL
PHC-C3YF-2UF SN:EB5395B.

I CERTIFY THAT THIS ENG
DETERMINED TO BE IN AIR

JOHN BENNAMAN [redacted]

BROUGHT FORWARD			
TOTALS			

SIGNATURE	LICENSE NUMBER

ENGINE LOG

DATE	R.P.M.		TIME ON GROUND			TIME IN AIR			TOTAL TIME		REPAIRS - ADJUSTMENTS	SIGNATURE	LICENSE NUMBER
	Ground	Air	Hrs.	Min.	Total	Hrs.	Min.	Total	Hrs.	Min.			
BROUGHT FORWARD													
TOTALS													

GARDNER AVIATION SPECIALIST, INC. 216 BARRY WHATLEY WAY GRIFFIN, GA 30224
LOG ID# 937 04-December-2002 WO# 18303/1 AC TT 1960.0 HOBBS 1960.0
N4482S S/N TC-1882 BEECH 95-B55 TSFREM 458.0 Pg 1 / 1

ENGINE AND PROPELLER WAS REMOVED FROM AIRCRAFT.ENGINE WAS OVERHAULED AND CERTIFIED BY SKY TECH INTERNATIONAL.REINSTALLED ENGINE AND NEW HARTZELL PROPELLER MODEL THREE BLADE PROPELLERS MODEL PHC-C3YF-2UF SN:EB5395B.SERVICED ENGINE WITH AEROSHELL 100 MINERAL BASE OIL.

I CERTIFY THAT THIS ENGINE HAS BEEN INSPECTED IN ACCORDANCE WITH AN ANNUAL INSPECTION AND IS DETERMINED TO BE IN AIRWORTHY CONDITION.

John Benneman 11/4/2002

JOHN BENNAMAN [redacted] Date

RIGHT

REBUILT ENGINE LOG

N44825
AIRCRAFT N NUMBER

IO470L-21B
ENGINE MODEL NUMBER

297518-R
ENGINE SERIAL NUMBER

USE ONLY FUEL CONFORMING TO ASTM D910.

USE OF AUTOMOTIVE GAS IS NOT APPROVED.

DATE		SIGNATURE	LICENSE NUMBER

Sky ~~Tech~~ International, Inc.
PO Box 912
Broken Arrow, OK 74013

SERVIEABLE PART

Customer Doug Turner W.O. No. 2408

Qty. 1 Type Teledyne Conf. S/N 297518-RCS

Part Name Engine P/N IO-470-L

Work done Overhauled

by [redacted]

Date 10/18/02 Inspected by [redacted]

Sp

recond

to a ring finish std steel bore. Magnetos overhauled. Fuel System overhauled by Mike's Fuel Metering – Tulsa, OK. Engine test run by Custom Airmotive – Tulsa, OK. Engine is approved for return to service.

[redacted]

Sky Tech International, Inc.

BROUG

TOTALS

DATE	R.P.M.		TI GR
	Ground	Air	Hrs.

GARDNER AVI
LOG ID# 937
N4482S S/N

ENGINE AND PROP
INTERNATIONAL.
PHC-C3YF-2UF S

I CERTIFY THAT
DETERMINED TO

JOHN BENNAMAN

BROUGHT FORWARD

TOTALS

ENGINE LOG

DATE		SIGNATURE	LICENSE NUMBER
	TSMOH 0 Teledyne Continental IO-470-L S/N 297518-R CS 10/18/2002 Engine overhauled this date in accordance with Federal Aviation Administration Regulations, Manufacture's Overhaul Manual and Parts Manual. New parts include: oil seals, cylinder base seals, gaskets, packings, circlips, lockplates, retaining rings, Crankshaft blade bushings, counterweight bushings, pistons (STD) R, piston rings, piston pins, rocker shafts, exhaust valves, exhaust valves, intake valves and seats (as needed), bearing inserts – rods and mains (STD), ball bearings, roller bearings, rubber couplings, cotter pins, lockwashers, and spark plugs. All steel magnifluxed by Aircraft Specialties – Tulsa, OK. All hardware plated by United Plating – Tulsa, OK. Crankshaft polished rods and mains (STD) and ultrasonic by Aircraft Specialties. Camshaft reground by Aircraft Specialties. Hydraulic Lifters reconditioned by Rock Aviation – Bourne, TX. Cylinders reworked and honed to a ring finish std steel bore. Magnetos overhauled. Fuel System overhauled by Mike's Fuel Metering – Tulsa, OK. Engine test run by Custom Airmotive – Tulsa, OK. Engine is approved for return to service. [redacted] Sky Tech International, Inc.		
BROUG			
TOTALS			

DATE	R.P.M.		TIM GRC	
	Ground	Air	Hrs.	M
	GARDNER AVIA LOG ID# 937 04 N4482S S/N T			
	ENGINE AND PROPE INTERNATIONAL RE PHC-C3YF-2UF SN:			
	I CERTIFY THAT T DETERMINED TO BE			
	JOHN BENNAMAN I			
BROUGHT FORWARD				
TOTALS				

ENGINE LOG

SIGNATURE	LICENSE NUMBER

DATE	R.P.M.		TIME ON GROUND			TIME IN AIR			TOTAL TIME		REPAIRS – ADJUSTMENTS	SIGNATURE	LICENSE NUMBER
	Ground	Air	Hrs.	Min.	Total	Hrs.	Min.	Total	Hrs.	Min.			
BROUGHT FORWARD													
TOTALS													

GARDNER AVIATION SPECIALIST, INC. 215 BARRY WHATLEY WAY GRIFFIN, GA 30224
LOG ID# 937 04-December-2002 WO# 18303/1 AC TT 1960.0 HOBBS 1960.0
N4482S S/N TC-1882 BEECH 95-B55 TSFREM 458.0 Pg 1 / 1

ENGINE AND PROPELLER WAS REMOVED FROM AIRCRAFT.ENGINE WAS OVERHAULED AND CERTIFIED BY SKY TECH INTERNATIONAL.REINSTALLED ENGINE AND NEW HARTZELL PROPELLER MODEL THREE BLADE PROPELLERS MODEL PHC-C3YF-2UF SN:EB5396B.SERVICED ENGINE WITH AEROSHELL 100 MINERAL BASE OIL.

I CERTIFY THAT THIS ENGINE HAS BEEN INSPECTED IN ACCORDANCE WITH AN ANNUAL INSPECTION AND IS DETERMINED TO BE IN AIRWORTHY CONDITION.

John Bennaman 11/4/2002

JOHN BENNAMAN [redacted] Date

ENGINE LOG

DATE	R.P.M.		TIME ON GROUND			TIME IN AIR			TOTAL TIME		REPAIRS - ADJUSTMENTS	SIGNATURE	LICENSE NUMBER
	Ground	Air	Hrs.	Min.	Total	Hrs.	Min.	Total	Hrs.	Min.			
3/12/2003			Engine was removed from N44825 for										
Hobbs			Repair/Overhaul.										
											[redacted]		
BROUGHT FORWARD													
TOTALS													

DATE	
	Gr
BROUGHT F	
T	

7/16/2003
Engine
Engine ove
Regulations
oil seals, c
crankshaft
piston ring
needed), b
hydraulic l
steel magni
Plating – T
counterwei
Specialties.
for return t

ENGINE LOG

SIGNATURE	LICENSE NUMBER

DATE	Gr

7/10/2003 Continental

Engine IO-470-L S/N 297518-R CS

Engine overhauled this date in accordance with Federal Aviation Administration Regulations, Manufacturer's Overhaul Manual and Parts Manual. New parts include: oil seals, cylinder base seals, gaskets, packings, circlips, lockplates, retaining rings, crankshaft blade bushings, counterweight bushings, counterweight pins, pistons, piston rings, piston pins, rocker shafts, exhaust valves, intake valves and seats (as needed), bearing inserts – rods and mains (M010), ball bearings, roller bearings, hydraulic lifters, rubber couplings, cotter pins, lockwashers, and spark plugs. All steel magnifluxed by Aircraft Specialties – Tulsa, OK. All hardware plated by United Plating – Tulsa, OK. Crankcase replaced with factory replacement. Crankcase, (2) counterweights, and camshaft replaced with yellow tagged units from Aircraft Specialties. Engine test run by Custom Airmotive – Tulsa, OK. Engine is approved for return to service.

[redacted]

BROUGHT F

T

SIGNATURE	LICENSE NUMBER

ENGINE LOG

SIGNATURE	LICENSE NUMBER

DATE	Gr

7/10/2003 Continental

Engine IO-470-L S/N 297518-R CS

Engine overhauled this date in accordance with Federal Aviation Administration Regulations, Manufacturer's Overhaul Manual and Parts Manual. New parts include: oil seals, cylinder base seals, gaskets, packings, circlips, lockplates, retaining rings, crankshaft blade bushings, counterweight bushings, counterweight pins, pistons, piston rings, piston pins, rocker shafts, exhaust valves, intake valves and seats (as needed), bearing inserts – rods and mains (M010), ball bearings, roller bearings, hydraulic lifters, rubber couplings, cotter pins, lockwashers, and spark plugs. All steel magnifluxed by Aircraft Specialties – Tulsa, OK. All hardware plated by United Plating – Tulsa, OK. Crankcase replaced with factory replacement. Crankcase, (2) counterweights, and camshaft replaced with yellow tagged units from Aircraft Specialties. Engine test run by Custom Airmotive – Tulsa, OK. Engine is approved for return to service.

[redacted]

BROUGHT F

T

SIGNATURE	LICENSE NUMBER

ENGINE LOG

DATE	R.P.M.		TIME ON GROUND			TIME IN AIR			TOTAL TIME		REPAIRS - ADJUSTMENTS	SIGNATURE	LICENSE NUMBER
	Ground	Air	Hrs.	Min.	Total	Hrs.	Min.	Total	Hrs.	Min.			
3/12/2003 Hobbs			Engine was removed from N4482S for Repair/Overhaul.								John Bennaman [redacted]		
BROUGHT FORWARD													
TOTALS													

DATE	Gr
BROUGHT F	
T	

7/10/2003
Ei .e
Engine o
Regulatio
oil seals,
crankshaf
piston rin
needed),
hydraulic
steel mag
Plating –
counterwe
Specialtie
for return

ENGINE LOG

DATE	R.P.M.		TIME ON GROUND			TIME IN AIR			TOTAL TIME		REPAIRS - ADJUSTMENTS	SIGNATURE	LICENSE NUMBER
	Ground	Air	Hrs.	Min.	Total	Hrs.	Min.	Total	Hrs.	Min.			
BROUGHT FORWARD													
TOTALS													

GARDNER AVIATION SPECIALIST, INC. 215 BARRY WHATLEY WAY GRIFFIN, GA 30224
LOG ID# 1276 28-July-2003 WO# 18694/4 AC TT 1969.0
N4482S S/N TC-1882 BEECH 95-B55 Pg 1 / 1

**** ITEM # 18694-4 REINSTALL ENGINE ****
ACTION: REINSTALLED ENGINE ASSEMBLY AFTER ENGINE WAS OVERHAULED AND CERTIFIED BY CUSTOM AIRMOTIVE INC. ENGINE WAS GROUND RUN AND RIGGED PER BEECH SERVICE INSTRUCTIONS. SERVICED WITH 12 QUARTS AEROSHELL 100 MINERAL OIL.

John Bennaman 7/28/2003
JOHN BENNAMAN [redacted] Date

DATE	R.P.M.		TI Gi
	Ground	Air	Hrs.
BROUGHT FORWARD			
TOTALS			

U.S. Department of Transportation
Federal Aviation Administration

MAJOR REPAIR AND ALTERATION
(Airframe, Powerplant, Propeller, or Appliance)

Form Approved
OMB No. 2120-0020

For FAA Use Only

Office Identification

INSTRUCTIONS: Print or type all entries. See FAR 43.9, FAR 43 Appendix B, and AC43.9-1 (or subsequent revision thereof) for instructions and disposition of this form. This is required by law (49 U.S.C. 1421). Failure to report can result in a civil penalty not to exceed $ 1000 for each such violation (Section 901 Federal Aviation Act of 1958).

1. Aircraft	Make BEECH	Model 95-B55
	Serial No. TC-1882	Nationality and Registration Mark N4482S
2. Owner	Name (As shown on registration certificate) RIVERCHASE DEVELOPMENT AVIATION CO.	Address (As shown on registration certificate) 30 OLD RUDNICK LANE DOVER, DE 19901 USA

3. For FAA Use Only

4. Unit Identification / **5. Type**

Unit	Make	Model	Serial No.	Repair	Alteration
AIRFRAME	[redacted]	*(As described in Item 1 above)*	[redacted]		X
POWERPLANT	CONTINENTAL	IO-470L	297519ORCS &		X
PROPELLER					
APPLIANCE	Type				
	Manufacturer				

6. Conformity Statement

A. Agency's Name and Address	B. Kind of Agency	C. Certificate No.
GARDNER AVIATION SPECIALIST, INC. 215 BARRY WHATLEY WAY GRIFFIN, GA 30224 [redacted]	U. S. Certified Mechanic Foreign Certified Mechanic X Certified Repair Station Manufacturer	[redacted] LIMITED AIRFRAME RADIO CLASS I, II, III

D. I certify that the repair and/or alteration made to the unit(s) identified in Item 4 above and described on the reverse or attachments hereto have been made in accordance with the requirements of Part 43 of the U. S. Federal Aviation Regulations and that the information furnished herein is true and correct to the best of my knowledge.

Date	Signature of Authorized Individual
20-November-2003	JOHN BENNAMAN John Bennaman

7. Approval for Return to Service

Pursuant to the authority given persons specified below, the unit identified in Item 4 was inspected in the manner prescribed by the Administrator of the Federal Aviation Administration and is [X] APPROVED [ ] REJECTED

BY							Other (Specify)
		FAA Flt. Standards Inspector		Manufacturer		Inspection Authorization	
		FAA Designee	X	Repair Station		Person Approved by Transport Canada Airworthiness Group	

Date of Approval or Rejection	Certificate or Designation No.	Signature of Authorized Individual
20-November-2003	[redacted]	JOHN BENNAMAN John Bennaman

FAA Form 337 (12-88) [redacted]

NOTICE

Weight and balance or operating limitation changes shall be entered in the appropriate aircraft record. An alteration must be compatible with all previous alterations to assure continued conformity with the applicable airworthiness requirements.

8. DESCRIPTION OF WORK ACCOMPLISHED (If more space is required, attach additional sheets. Identify with aircraft nationality and registration mark and date work completed.)

N4482S BEECH 95-B55 TC-1882

THE FOLLOWING WORK WAS ACCOMPLISHED ON WO #19054.

EQUIPMENT REMOVED:

MFG	MODEL	DESCRIPTION	LOC
EDO AIRE	1U028-204-7	FUEL FLOW INDICATOR	FS61

EQUIPMENT INSTALLED:

MFG	MODEL	DESCRIPTION	PART NUMBER	INSTALL MANUAL	REV	LOC
WSI	AV200	WEATHER RCVR	305391-000	305427-00	IR	FS199
COMANT	CI-1530-1	WEATHER ANTENNA	305394	305427-00	IR	FS147
SHADIN	DIGIFLO-L	FUEL FLOW IND	912041T-38-D	4084	10/84	FS61
SHADIN	201B	TRANSDUCERS	680501-1	4084	10/84	FS25
AMERIKING	AK450	ELT	AK450	IM-450		FS230
AMERIKING	AK450	REMOTE UNIT	450004	IM-450		FS61

INSTALLED WSI AV-200 INFLIGHT WEATHER INFORMATION SYSTEM IN ACCORDANCE WITH WSI INSTALLATION MANUAL PN:305427-00 REV IR DATED JULY 16,2003.INSTALLED THE RECEIVER IN THE AFT SECTION OF THE FUSELAGE.INSTALLED A WX SENSOR ON THE TOP OF THE AFT CABIN SECTION.INTERFACED THIS SYSTEM TO THE UPS AVIATION TECHNOLOGIES MX20 MULTI-FUNTION DISPLAY. NOTE: INSTALLED AV200 TID# 300644.RELOCATED AN EXISTING COM ANTENNA FROM THE TOP OF THE AFT CABIN SECTION FS147 TO THE TOP OF THE EMPENAGE AT FS197.INSTALLED THE WSI ANTENNA WHERE THE COM ANTENNA WAS ORIGINALLY LOCATED.
REMOVED IU028 FUEL FLOW INDICATOR.INSTALLED SHADIN DIGIFLO-L FUEL FLOW INDICATOR PN:910532P SN:4888 AND FUEL FLOW TRANSDUCERS PN:68050-A1 SN:130436 AND SN:130437.INTERFACED THE INDICATOR TO THE GARMIN GNS430.INSTALLED THIS SYSTEM IN ACCORDANCE WITH SHADIN REPORT# 4036 DATED SEPT 10,1986 AND STC# SA579GL. INSTALLED FUEL FLOW TRANSDUCERS IN ACCORDANCE WITH SHADIN REPORT# 4029 DATED NOV 5,1990 AND STC# SE552GL.NOTE: THAT THE K FACTOR IS SET AT 29.8.
INSTALLED NEW AMERIKING AK-450 ELT SN:467644 IN ACCORDANCE WITH INSTALLATION MANUAL PN:IM-450. THIS INSTALLATION MEETS THE REQUIRMENTS OF TSO-C91a.THE ELT REMOTE UNIT WAS INSTALLED IN THE PILOTS INSTRUMENT PANEL.

THE UNITS LISTED ABOVE WERE INSTALLED IN ACCORDANCE WITH THE REFERENCED AIRCRAFT MAINTENANCE MANUALS AND AC 43.13B. CIRCUIT BREAKERS FOR THIS EQUIPMENT ARE LOCATED WITH THE OTHER AVIONICS CIRCUIT BREAKERS.

THE ALTERATIONS LISTED MEET THE FOLLOWING FAR'S: 23.303, 23.305, 23.603, 23.611, 23.1301, 23.1309, 23.1321, 23.1357, 23.1365, 23.1431, 23.1519, 23.1547 AND APPLICABLE RULES PERTAINING TO THE AIRCRAFT'S CERTIFICATION BASIS.

THE UNITS LISTED IN THIS ALTERATION WERE INSPECTED, CALIBRATED AND TESTED IN ACCORDANCE WITH MANUFACTURES INSTRUCTIONS AND FOUND TO OPERATE AS INTENDED.

ALL FUNCTIONS ARE COMPATIBLE TO OTHER AIRCRAFT SYSTEMS.

WEIGHT AND BALANCE AND LOG BOOK ENTRIES MADE PER FAR43.9 AND FAR91.407
----------THE END----------

☐ ADDITIONAL SHEETS ARE ATTACHED

* U.S.GPO:1991-0-568-012/40035

Supplemental Type Certificate

STC Number:
SE443GL

This certificate issued to:
Shadin Company, Inc

STC Holder's Address:
14280 N. 23rd Avenue
Plymouth MN 55447-4910
United States

Description of the Type Design Change:
Incorporation of a fuel flow transducer.

Application Date:

Status:
Amended, 06/30/1989

Responsible Office:
ACE-115C Chicago Aircraft Certification Office Tel: [redacted]

TC Number -- Make -- Model:
E5CE -- Teledyne Continental Motors -- IO-520-BB
E5CE -- Teledyne Continental Motors -- IO-520-L
E5CE -- Teledyne Continental Motors -- IO-520-K
E5CE -- Teledyne Continental Motors -- IO-520-F
E5CE -- Teledyne Continental Motors -- IO-520-A
E5CE -- Teledyne Continental Motors -- IO-520-BA
E5CE -- Teledyne Continental Motors -- IO-520-B
E5CE -- Teledyne Continental Motors -- IO-520-D
E5CE -- Teledyne Continental Motors -- IO-520-J

Full Text of STC:

▼Comments

Comments:

Supplemental Type Certificate

STC Number:
SE552GL

This certificate issued to:
Shadin Company, Inc

STC Holder's Address:
14280 N. 23rd Avenue
Plymouth MN 55447-4910
United States

Description of the Type Design Change:
Incorporation of a fuel flow transducer.

Application Date:

Status:
Amended, 01/24/1991

Responsible Office:
ACE-115C Chicago Aircraft Certification Office Tel:[redacted]

TC Number -- Make -- Model:
3E1 -- Teledyne Continental Motors -- IO-470-U
3E1 -- Teledyne Continental Motors -- IO-470-V
3E1 -- Teledyne Continental Motors -- IO-470-S
3E1 -- Teledyne Continental Motors -- IO-470-N
3E1 -- Teledyne Continental Motors -- IO-470-VO
3E1 -- Teledyne Continental Motors -- IO-470-L
3E1 -- Teledyne Continental Motors -- IO-470-J
3E1 -- Teledyne Continental Motors -- IO-470-E
3E1 -- Teledyne Continental Motors -- IO-470-D
3E1 -- Teledyne Continental Motors -- IO-470-K

Full Text of STC:

▼Comments

Comments:

Shadin Co. Inc.
6950 Wayzata Blvd.
Minneapolis, MN 55426

SUPPLMNT.MNL

FAA APPROVED

AIRPLANE FLIGHT MANUAL SUPPLEMENT

FOR

Model: Beech Baron 95-55, 95-55A, 95-55B,
95-B55A, 95-B55B

REG. NO. N4482S

SER. NO. TC-1882

This supplement must be attached to the FAA Approved Airplane Flight Manual when the Digital Fuel Flow Meter is installed in accordance with STC SA579GL . The information contained herein supplements the information of the Basic Airplane Flight Manual; for limitations, procedure, and performance information not contained in this supplement, consult the basic Airplane Flight Manual.

FAA APPROVED: Edward S. Adler
for W. F. Horn, Chief,
Chicago Aircraft
Certification Office
FAA Central Region

DATE: JUN 10 1987

United States of America

Department of Transportation — Federal Aviation Administration

Supplemental Type Certificate

Number SE552GL

This certificate issued to Shadin Company, Inc.
14280 N. 23rd Avenue
Plymouth, Minnesota 55447

certifies that the change in the type design for the following product with the limitations and conditions therefor as specified hereon meets the airworthiness requirements of Part 13 *of the* Civil Air *Regulations.* See Type Certificate Data Sheet No. 3E1 for complete certification basis.

Original Product — Type Certificate Number: 3E1

Make: Teledyne Continental Motors

Model: IO-470-D, IO-470-J, IO-470-K, IO-470-L, IO-470-N, IO-470-U, IO-470-V, IO-470-VO, IO-470-E, IO-470-S

Description of Type Design Change:

Incorporation of a Fuel Flow Transducer in accordance with Shadin Company Report Number 4029, dated November 5, 1990, or later FAA Approved revisions.

Limitations and Conditions:

This approval should not be extended to other engines of these models on which other previously approved modifications are incorporated, unless it is determined by the installer that the interrelationship between this change and any other previously approved modifications will introduce no adverse effect on the airworthiness of these engines.

This certificate and the supporting data which is the basis for approval shall remain in effect until surrendered, suspended, revoked, or a termination date is otherwise established by the Administrator of the Federal Aviation Administration.

Date of application: July 14, 1981

Date of issuance: August 25, 1981

Date reissued:

Date amended: January 24, 1991

By direction of the Administrator

Donald P. Michal
(Signature)

Donald P. Michal, Manager
Chicago Aircraft Certification Office
(Title)

Any alteration of this certificate is punishable by a fine of not exceeding $1,000, or imprisonment not exceeding 3 years, or both.

This certificate may be transferred in accordance with FAR 21.47.

FAA Form 8110-2 (10-68)

United States of America

Department of Transportation — Federal Aviation Administration

Supplemental Type Certificate

Number SA579GL

This certificate, issued to Shadin Company, Inc.
6950 Wayzata Boulevard
Minneapolis, MN 55426

certifies that the change in the type design for the following product with the limitations and conditions therefor as specified hereon meets the airworthiness requirements of Part 3 *of the* Civil Air *Regulations.* See Type Certificate Data Sheet 3A16 for complete certification basis.

Original Product — Type Certificate Number: 3A16
Make: Beech
Model: 95-55, 95-A55, 95-B55, 95-B55A, 95-B55B

Description of Type Design Change:
Installation of a Shadin Company Fuel Flow Indicating System in accordance with Shadin Company Report Number 4036, revised September 10, 1986, or other FAA approved revision.

Limitations and Conditions: 1. If the original Fuel Flow Indicator is removed, FAA Approved Flight Manual Supplement dated June 10, 1987 (or other FAA approved revision) is required. 2. This approval should not be extended to other airplanes of this model that incorporate any other previously approved modification, unless it is determined that the interrelationship between this change and any other previously approved modification will introduce no adverse effect on the airworthiness of these airplanes.

This certificate and the supporting data which is the basis for approval shall remain in effect until surrendered, suspended, revoked, or a termination date is otherwise established by the Administrator of the Federal Aviation Administration.

Date of application: July 14, 1981 *Date reissued:*

Date of issuance: November 30, 1981 *Date amended:* July 1, 1982, June 10, 1987

By direction of the Administrator

W. F. Horn *(Signature)*
Manager, Chicago Aircraft Certification Office, ACE-115C, Central Region
(Title)

Any alteration of this certificate is punishable by a fine of not exceeding $1,000, or imprisonment not exceeding 3 years, or both.

This certificate may be transferred in accordance with FAR 21.47.

FAA Form 8110-2 (10-68)

Shadin
COMPANY INCORPORATED

6831 Oxford Street
St. Louis Park, MN 55426
U.S.A.
[redacted]

INVOICE NO.	INVOICE DATE	PAGE
00027924	11/06/03	1

SOLD TO
2464
GARDNER AVIATION SPECIALISTS
ATTN: TANYA
215 BARRY WHATLEY WAY
GRIFFIN GA 30224

SHIP TO
000001
GARDNER AVIATION SPECIALISTS
ATTN: TANYA
215 BARRY WHATLEY WAY
GRIFFIN GA 30224

TOTAL DUE

SHADIN CO., INC. St. Louis Park, MN 55426 PLEASE RETURN THIS PORTION OF THE INVOICE WITH YOUR PAYME

SLS1	SLS2	DUE DATE	DISC. DUE DATE	ORDER NO.	ORDER DATE	SHIP DATE	SHIP NO.
EC		11/16/03		00014818	11/06/03	11/06/03	000001

TERMS DESCRIPTION	CUSTOMER P.O. NUMBER	SHIP VIA
COD	VERBAL	UPS BLUE COD

ITEM ID	TX CL	UNIT OF MEASURE	ORDERED	SHIPPED	UNIT PRICE	EXTENSION
KIT A1	00	EA	2.0000	2.0000		880.
TRANSDUCER KIT A1, 680501A						
Ser 130436-29.8					440.0000	
Ser 130437-29.8					440.0000	
	00		1.0000	1.0000	.0000	
SE443GL STC PAPERWORK						
IO-470-L ENGINES						
	00		1.0000	1.0000	.0000	
SHIP UPS BLUE COD						
					Subtotal	880.

TAXABLE	NONTAXABLE	FREIGHT	SALES TAX	MISC. CHARGE	TOTAL
.00	880.00	18.20	.00	.00	898.

RS — ADJUSTMENTS — REMARKS | SIGNATURE | LICEN NUM | DATE

Y WAY GRIFFIN, GA 30224 [redacted]

Pg 1 / 1

EMOVED KMA20 AUDIO PANEL,SPA-400
ERTOR,KN73 GS RCEIVER,KR85 ADF RECEIVER AND
KA39 CONVERTORS. INSTALLED A GARMIN GMA340
N INSTALLATION MANUAL PN:190-00149-01 REV
NS430 GPS/NAV/COM AS THE NEW #1 GPS/NAV/COM
90-00140-02 REVISION J.INTERFACED TO THE
.THE EXISTING ENCODER SUPPLIES ALTITUDE
RD CABIN WHERE AN OLD GPS SENSOR WAS
N DISPLAY JUST BELOW THE AUDIO PANEL IN THE
TO SUPPLY ALTITUDE INFORMATION FOR THE
D THE MX20 IN ACCORDANCE WITH UPS AVIATION
13/02 AND STC#SA02154AK. INSTALLED KING
#2 NAV INDICATOR. REMOVED CENTURY
OVED FOR CESSNA 337 WAS INSPECTED AND
DIFICATION TO BE ELIGIBLE FOR INSTALLATION
STEM IN ACCORDANCE WITH STEC INSTALL
INSTALLED BF GOODRICH WX900 STORMSCOPE
NSTALLATION MANUAL PN:78-8060-6104-6 REV B.
S.

INSPECTION — MAINTENANCE — REPAIRS — ALTERATIONS

2

GARDNER AVIATION SPECIALIST, INC. 215 BARRY WHATLEY WAY GRIFFIN, GA 30224 [redacted]
LOG ID# 1273 28-July-2003 WO# 18694/7 HOBBS 1969.0
N4482S S/N TC-1882 BEECH 95-B55

Pg 1 / 1

**** ITEM # 18694-7 IFR CERTIFICATION ****
ACTION: PERFORMED ALTIMETER CERTIFICATION, STATIC LEAK CHECK, TRANSPONDER CERTIFICATION, AND ALTITUDE REPORTING TEST PER FAR 91.411 AND 91.413 REQUIREMENTS. CALIBRATED ALTIMETER TO 20,000 FEET.

ALTIMETER:	5934-1	S/N:V6640
ENCODER:	AK-350	S/N:52145
TRANSPONDER:	GTX320A	S/N:83807583

John Bennaman 7/28/2003
JOHN BENNAMAN [redacted] Date

HARTZELL PROPELLER INC.

Aircraft Accident/Incident Report No.: 031121

Date of Accident:	November 21, 2004
Location:	Griffin, GA
NTSB File No.:	ATL04FA038
Aircraft:	Beech 95-B55 Baron
Registration No.:	N4482S
Serial No.:	TC1882
Operator:	per N-number: River Chase Development Aviation Inc. 30 Old Rudnick Ln Dover, DE 19901
Written by:	Tom McCreary Air Safety Investigation Manager
Date:	August 19, 2004

Contents:

ACCIDENT SYNOPSIS

According to the NTSB preliminary report, the aircraft climbed to 200' after take-off, turned left, and crashed into the roof of a commercial building.

Aircraft Damage: Destroyed
Injuries: One person on board, one fatal

SUMMARY AND ANALYSIS OF FINDINGS

The left propeller had multiple blade angle witness marks (8°, 10°, 14°, 20°, and 24°). The multiplicity of marks indicates that most, if not all, are post-impact indications.

The right propeller had a witness mark at 13° blade angle (approximate low pitch position). If this were a pre-impact blade angle, it would indicate something less than maximum power but a more definitive calculation could not be made because, at low speed, the propeller would be the at low pitch position at any power setting less than maximum.

The left propeller had significant blade bending and twisting. Normally this, plus torsional fracture of the engine shaft, suggests power ON at impact. However, some of the harsh damage is likely attributable to the manner of impact, as evidenced by edgewise bending near the shank of blade L3. Also, blade L1 was straight with little damage, which suggests that the left propeller was not at high power (except that possibly the crankshaft fractured and the propeller separated prior to L1 blade impact).

The right propeller had very little bending or twisting of the blades. This suggests that it had low rotational energy at the time of impact.

Blades from both propellers had evidence of rotational scoring.

CONCLUSIONS

Both propellers were rotating and not feathered at the time of impact. The blade damage suggested that right propeller impacted with low power or no power. The left propeller appeared to have significant rotational energy but the power output could not be determined.

There were no discrepancies noted that would preclude normal operation. All damage was consistent with impact damage.

PROPELLER TEARDOWN REPORT

Date of Investigation: July 19, 2004

Location: Hartzell Propeller Inc.
Piqua, Ohio

Propeller Model: PHC-C3YF-2UF with FC7663B-2 blades

Representatives: Tom McCreary Hartzell Propeller Inc.
Richard Hermanns FAA - FSDO Cincinnati

General Comments:

This type propeller is a 3-bladed single-acting, hydraulically operated constant speed model. Oil pressure from the propeller governor is used to move the blades to the low pitch (blade angle) direction. A spring, an air charge, and blade counterweight twisting moments move the blades to the high pitch/feather direction in the absence of governor oil pressure. The blades and hub are of aluminum construction. Propeller rotation is clockwise as viewed from the rear.

Installation Data: (Data reference the 30-inch station)

Low Pitch:	13.5	± 0.1	degrees
Start Lock:	19.0	± 1.5	degrees
Feather:	84.0	± 1.0	degrees

Service History:

Logbook information was not available.

	S/N	Date of manufacture	TTSN	TSO
Left Hub	EB5395B	9/6/02	unknown	unknown
Blades	J78031	9/6/02	unknown	unknown
	J78032	9/6/02	unknown	unknown
	J78029	9/6/02	unknown	unknown
Right Hub	EB5396B	9/6/02	unknown	unknown
Blades	J77937	9/6/02	unknown	unknown
	J77936	9/6/02	unknown	unknown
	J77938	9/6/02	unknown	unknown

Position: LEFT

Hub Serial Number: EB5395B **Factory No.:** A61993B

Blade Model: FC7663B-2

S/N L1: J78031
S/N L2: J78032
S/N L3: J78029

Blade Orientation:

L1-L2-L3 clockwise as viewed from the rear of the propeller. The hub serial number was between the # L1 and # L2 blades.

As Received Condition:

The spinner dome had not been removed. The engine shaft was fractured near the propeller mounting flange. The engine flange had not been removed from the propeller.

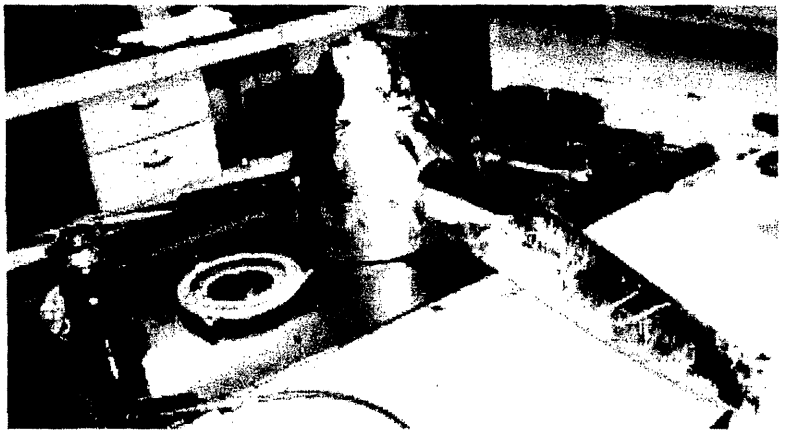

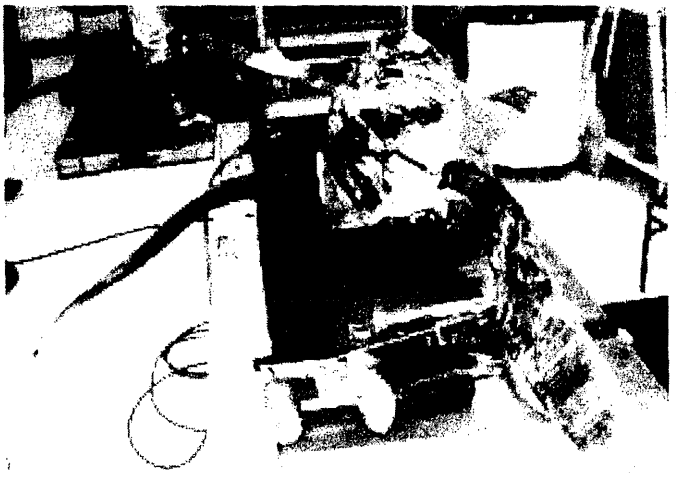

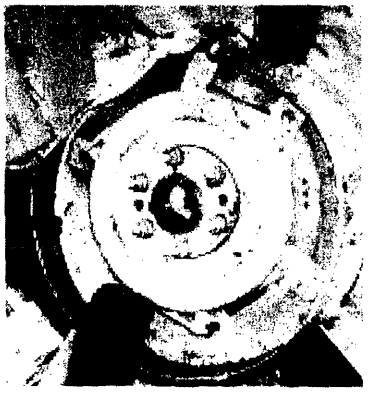

Spinner Assembly:

The spinner dome was crushed on the forward end and dented on two sides. The front spinner cap had spiral crushing. The spinner bulkhead was crushed on one side

Propeller Cycling:

The pitch change mechanism was seized and cycling of the mechanism was not possible. The air valve was broken and it did not retain its air charge.

Engine/Propeller Mounting:

The engine shaft was fractured about 1/2 inch aft of the propeller mounting flange. The engine shaft had spiral cracks around the fracture surface. The propeller attachment bolts and propeller mounting flange were unremarkable.

Cylinder: (S/N C1675)

The cylinder was unremarkable. It had a decal indicating use of Aeroshell # 6 grease and an air charge decal P/N CPR 22A.

Piston:

Intact and unremarkable

Pitch Change Rod:

Intact and unremarkable

Fork:

Intact and unremarkable

Spring/Spring Guides:

Intact and unremarkable

Low Pitch Stop and Feather Stop:

The low pitch stop had a light impact mark. The feather stop was unremarkable

Start Lock:

Intact and operable

Hub Assembly:

Intact and unremarkable

Preload Plates:

NOTE: For this propeller model, when the blade knob is aligned with the hub parting line, the blade angle at the reference station is 48° (knob 12° + 36 = 48°).

1 preload plate had an impact mark from fork contact at 40° from the hub centerline. This equates to 8° blade angle.

2 preload plate had three impact marks from fork contact at 28°, 34°, and 38° from the hub centerline. These equate to 20°, 14°, and 10° blade angle respectively.

3 preload plate had an impact mark caused by contact with the pitch change knob at 24° from the hub centerline. This equates to 24° blade angle.

Propeller Blades:

L3 blade pitch change knob was fractured. L1 and L2 blade pitch change knobs were intact. All three blade counterweights were intact.

L1 blade had rotational marks on the outer 14 inches on the camber side. It had gouges in the leading edges on the outer 1/3 of the blade.

L2 blade was bent aft about 30° at mid-blade. It was bent slightly forward at 2/3 radius. The outer two inches of the tip was bent aft and twisted toward low pitch.

L3 blade was bent forward approximately 20° at 1/4 radius. It was bent aft and twisted toward low pitch at mid-blade. There were very deep gouges in the leading edge. There was rotational scoring on the camber side. The blade had a chordwise aft bend near the shank. There was rotational marking (appeared to be roof tar) on the outer 12 inches of the blade on the camber side.

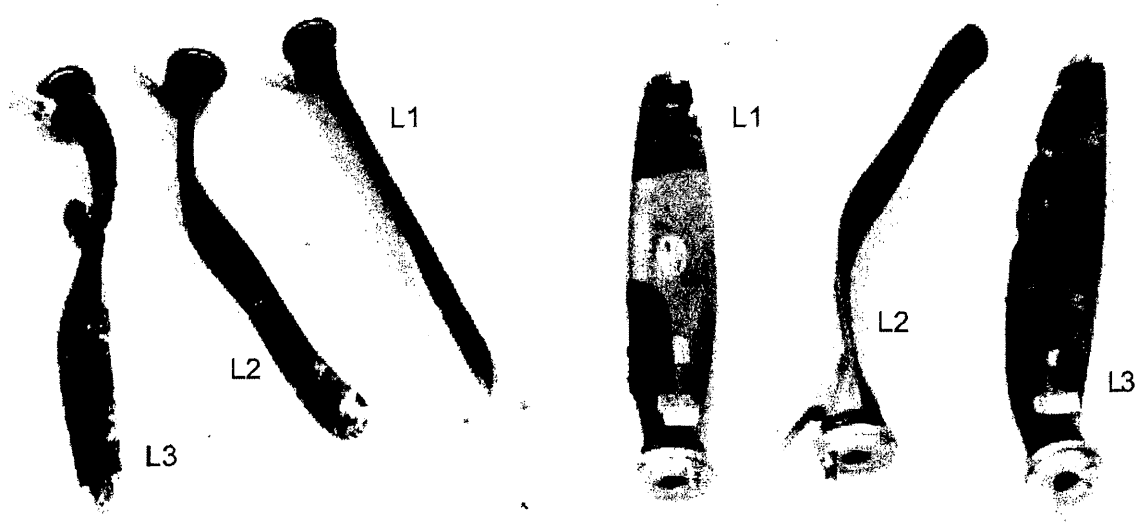

Position: RIGHT

Hub Serial Number: EB5396B **Factory No.:** A61994B

Blade Model: FC7663-2R

S/N 1: J77937
S/N 2: J77936
S/N 3: J77938

Blade Orientation:

1-2-3 counterclockwise as viewed from the rear of the propeller. The hub serial number was between the # 1 and # 2 blades.

As Received Condition:

The spinner dome had not been removed. The propeller had been removed from the engine. The propeller attachment nuts had been re-installed on the mounting studs.

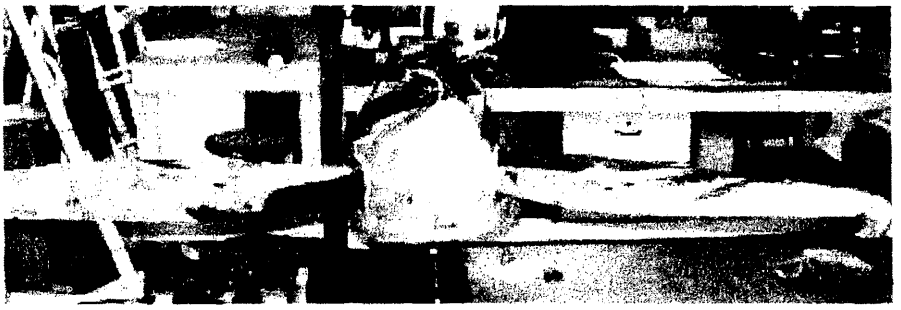

Spinner Assembly:

The spinner dome had frontal crushing in a spiral pattern. The spinner bulkhead was unremarkable.

Propeller Cycling:

Cycling of the mechanism was not attempted.

The air valve was broken and it did not retain its air charge.

Engine/Propeller Mounting:

The mounting flange was intact and unremarkable.

Cylinder: (S/N: E1667)

The cylinder was unremarkable. It had a decal indicating use of Aeroshell # 6 grease, an installation torque decal, TOR 60-70, and an air charge decal P/N CPR 22A.

Piston:

Intact and unremarkable

Pitch Change Rod:

Intact and unremarkable

Fork:

Intact and unremarkable

Spring/Spring Guides:

Intact and unremarkable

Low Pitch Stop and Feather Stop:

The low pitch stop had a light impact mark. The feather stop was unremarkable

Start Lock:

Intact and operable

Hub Assembly:

The hub had internal damage caused by inward movement of the blades/preload plates. The cylinder attachment and mounting flange were intact and unremarkable.

Preload Plates:

NOTE: For this propeller model, when the blade knob is aligned with the hub parting line, the blade angle at the reference station is 48° (knob 12° + 36 = 48°).

1 and # 3 preload plates did not have any marks that could be used to calculate a blade angle.

2 preload plate had an impact mark at 35° from the hub centerline. This equates to 13° blade angle.

Propeller Blades:

All three blade had traces of what appeared to be roofing tar on the camber side of the blades. # 3 blade pitch change knob was fractured. # 1 and # 2 blade pitch change knobs were intact. All three blade counterweights were intact.

1 blade had rotational scoring on the camber side with leading edge damage in the tip area. It was mildly bent aft about 10° at mid-blade.

2 blade appeared to be undamaged except for the presence of black tar on the camber side.

3 blade was slight bent forward at 1/3 radius. The outer two inches of the tip was curled aft. The tip had rotational scoring on the camber side with leading edge damage.

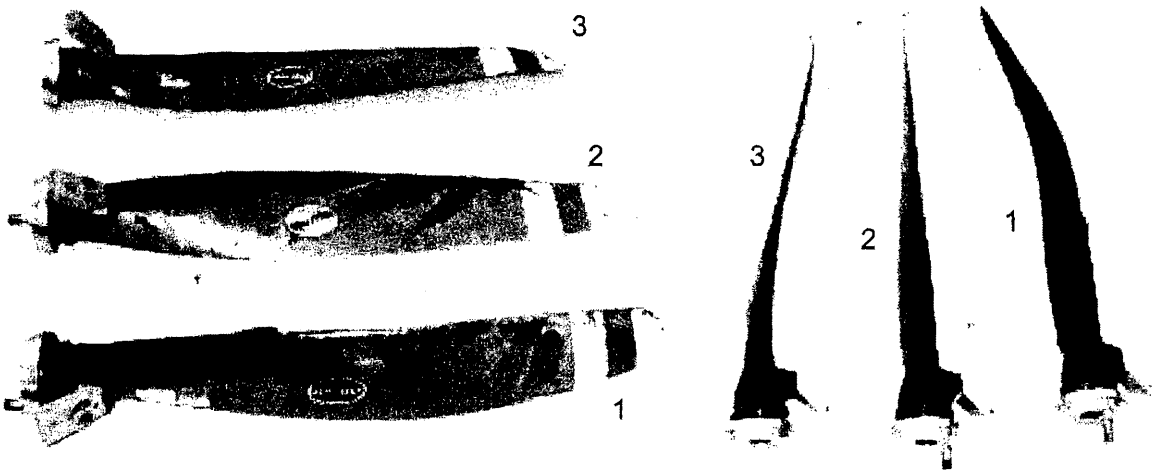

PHOTOGRAPHIC SUMMARY

NOTE: The following digital photographs are original and unedited and available on compact disc. The numbering sequence may not be chronological as some may have been deleted if out-of-focus, too dark, redundant, etc. Photos used in the text of this report are taken from photos on this list but may have been adjusted from the original. Modifications to images used in the report are limited to cropping, magnification, file compression, or enhancement of color, brightness, or contrast for the sole purpose to improve clarity of the report. No other alterations are permitted.

PHOTOGRAPH NUMBER	DESCRIPTION
Dscn0128.jpg	both propellers, as received
	RIGHT PROPELLER
Dscn0129.jpg	right propeller, as received
Dscn0130.jpg	right propeller, as received
Dscn0131.jpg	right propeller, as received
Dscn0132.jpg	propeller, spinner dome removed
Dscn0133.jpg	cylinder, # 2 and # 3 blade counterweights
Dscn0134.jpg	cylinder, #1 blade counterweight
Dscn0135.jpg	miscellaneous parts
Dscn0136.jpg	rear hub half
Dscn0137.jpg	front hub half
Dscn0138.jpg	low pitch stop
Dscn0139.jpg	piston, start lock, feather spring
Dscn0140.jpg	cylinder
Dscn0141.jpg	# 1 preload plate
Dscn0142.jpg	# 2 preload plate
Dscn0143.jpg	# 3 preload plate
Dscn0144.jpg	# 1 blade butt
Dscn0145.jpg	# 2 blade butt
Dscn0146.jpg	# 3 blade butt
Dscn0147.jpg	fractured pitch change knob
Dscn0148.jpg	fractured pitch change knob
Dscn0149.jpg	all three blades, camber side
Dscn0150.jpg	all three blades, camber side
Dscn0151.jpg	# 3 blade tip
Dscn0152.jpg	# 1 blade tip
Dscn0153.jpg	all three blades, lead edge
Dscn0154.jpg	all three blades, flat side
Dscn0155.jpg	spinner dome
Dscn0156.jpg	spinner dome
Dscn0157.jpg	spinner dome
	LEFT PROPELLER
Dscn0158.jpg	left propeller mounting flange, fractured engine shaft
Dscn0159.jpg	left propeller, as received
Dscn0160.jpg	left propeller, as received
Dscn0161.jpg	left propeller, as received
Dscn0162.jpg	spinner dome

Dscn0163.jpg	miscellaneous parts
Dscn0164.jpg	rear hub half
Dscn0165.jpg	front hub half
Dscn0166.jpg	cylinder
Dscn0167.jpg	start lock, feather spring
Dscn0168.jpg	low pitch stop
Dscn0169.jpg	piston, pitch change rod
Dscn0170.jpg	L1 blade butt
Dscn0171.jpg	L2 blade butt
Dscn0172.jpg	L3 blade butt
Dscn0173.jpg	fractured pitch change knob
Dscn0174.jpg	L1 preload plate
Dscn0175.jpg	L2 preload plate
Dscn0176.jpg	L3 preload plate
Dscn0177.jpg	fork
Dscn0178.jpg	all three blades, lead edge
Dscn0179.jpg	L3 blade tip
Dscn0180.jpg	L2 blade tip
Dscn0181.jpg	all three blades, camber side
Dscn0182.jpg	L3 blade shank
Dscn0183.jpg	L1 blade tip
Dscn0184.jpg	all three blade
Dscn0185.jpg	fractured engine flange
Dscn0186.jpg	fractured engine flange

Shadin
COMPANY INCORPORATED

6831 OXFORD STREET, ST. LOUIS PARK, MINNESOTA 55426-4412, U.S.A
PHONE: 952-927-6500 FAX: 952-924-1111
Website: www.shadin.com

INSPECTION REPORT

REF NTSB Accident Report #: ATL04FA038: Beech Craft Baron, N4482S; Shadin Fuel Flow Transducers, P/N Kit A, S/Ns 130436 and 130437

The transducers and connection hoses were inspected.

1. S/N 130437 - Transducer appeared intact with no visible damage. Fuel was poured into the inlet side of the transducer. The fuel exited the outlet side of the transducer without visible restriction to flow.

2. S/N 130436 - Transducer appeared charred. Fuel was poured into the inlet side of the transducer. The flow of fuel to the outlet side of the transducer appeared restricted. The fitting on the inlet side was removed and the inlet inspected. Inspection revealed debris around the inlet orifice, and this debris was captured and inspected microscopically. The debris had radius features similar to that of the connection hose. After removing the debrisfrom the transducer, fuel was again poured into the inlet and the fuel exited the outlet without visible restriction to flow.

12/11/2003
Witnessed by:

Rasheed Reda
Shadin Co., Inc. General Manager

Scot Thompson
FAA Principal Avionics Inspector

Tom Messiah
Technical Support Supervisor

Enclosure: Shadin invoice 00027924

U.S. Department
of Transportation
Federal Aviation Administration

Memorandum

Subject: **INFORMATION:** Accident #ATL04FA038, N4482S

Date: December 12, 2003

From: Scot E. Thompson
Principal Avionics Inspector
MSP FSDO GL-15

Reply to Attn. of:

To: Investigator Eric Alleyne--NTSB
Atlanta Federal Building
Room 3M25
60 Forsyth St. SW
Atlanta, GA 30303

This is an addendum to the inspection report from Shadin Company Incorporated dated 12/11/2003.

On transducer S/N 130436 (charred transducer) it was noted that the inlet hose coupler was not as tight as the outlet hose coupler.

On transducer S/N 130437 it was noted that both hose couplers were tight.

Scot E. Thompson

Tooh
8 34
152

HARTZELL

PROPELLER LOGBOOK

PROPELLER MODEL PHC-C3YF-2UF

PROPELLER S/N EB5395B

LOGBOOK # Left

PROPELLER MAINTENANCE RECORD

Position Left

Propeller Model PHC-C3YF-2UF

Propeller S/N EB 5395B

Blade Design

Blade S/N's

No. 1

No. 2

No. 3

No. 4

No. 5

No. 6

Spinner Assembly Part No.

PITCH RANGE

High/Feather

Start Lock

Low

Reverse

Aircraft Manufacturer Hartzell

Aircraft Model 95-B55

S/N TC-1882

Registration N44825

Date	Propeller TSN	Propeller TSO	A/C Hrs	Description of all operations pertaining to Airworthiness Directives, Service Documents, Overhaul, Major or Minor Repair, and Inspections.
				GARDNER AVIATION SPECIALIST, INC. 216 BARRY WHATLEY WAY GRIFFIN, GA 30224 LOG ID# 938 04-December-2002 WO# 18303/1 AC TT 1960.0 HOBBS 1960.0 N4482S S/N TC-1882 BEECH 95-B55 Pg 1 / 1
				INSTALLED THIS PROPELLER ONTO THE LEFT ENGINE OF BEECHCRAFT 95-B55 N4482S SN:TC-B55 IN ACCORDANCE WITH BEECH SERVICE MANUAL AND HARTZELL STC# SA795CE.
				I CERTIFY THAT THIS PROPELLER HAS BEEN INSPECTED IN ACCORDANCE WITH AN ANNUAL INSPECTION AND IS DETERMINED TO BE IN AIRWORTHY CONDITION. John Bennaman 12/4/2002 JOHN BENNAMAN [redacted] Date

HARTZELL

PROPELLER LOGBOOK

PROPELLER MODEL PHC-C3YF-2UF

PROPELLER S/N EB5396B

LOGBOOK # Right

PROPELLER MAINTENANCE RECORD

Position Right

Propeller Model PHC-C3YF-2UF

Propeller S/N EB5396B

Blade Design

Blade S/N's

No. 1

No. 2

No. 3

No. 4

No. 5

No. 6

Spinner Assembly Part No.

PITCH RANGE

High/Feather

Start Lock

Low

Reverse

Aircraft Manufacturer Hartzell

Aircraft Model 95-B55

S/N TC-1882

Registration N4482S

Date	Propeller TSN	Propeller TSO	A/C Hrs	Description of all operations pertaining to Airworthiness Directives, Service Documents, Overhaul, Major or Minor Repair, and Inspections.
				GARDNER AVIATION SPECIALIST, INC. 215 BARRY WHATLEY WAY GRIFFIN, GA 30224 LOG ID# 938 04-December-2002 WO# 18303/1 AC TT 1960.0 HOBBS 1960.0 N4482S S/N TC-1882 BEECH 95-B55 Pg 1 / 1 INSTALLED THIS PROPELLER ONTO THE RIGHT ENGINE OF BEECHCRAFT 95-B55 N4482S SN:TC-B55 IN ACCORDANCE WITH BEECH SERVICE MANUAL AND HARTZELL STC# SA795CE. I CERTIFY THAT THIS PROPELLER HAS BEEN INSPECTED IN ACCORDANCE WITH AN ANNUAL INSPECTION AND IS DETERMINED TO BE IN AIRWORTHY CONDITION. John Bennaman 12/4/2002 JOHN BENNAMAN [redacted] Date

Balance

Wgt. Qty. and Type	Lead	#1 14	#2 2W	#3 0	#4
	Trail	#1 0	#2 0	#3 0	#4
	Front (Assy. S/N)			Back	

Balanced By: M Date: 9-5

Inspection

Non-installed Hardware and Dimensional Checks

"E" Flange Only		"L" Flange Only		"N" Flange Only	
(6) A-1381 Washers	✓	(4)B-6489-25 Bolts		(8)A-3257 Nuts	
(6) A-2044 Lock Nuts	✓	(4)B-6526-7 Washers		(8)A-2048-2 Washers	
A-2429-~~1~~,4,~~1~~ Studs				A-3254 Studs	
Torqued 25 ft.lbs.	✓			Torqued 35 ft. lbs.	
Mtg Stud Protrusion	✓			Mtg Stud Protrusion	
Dowel Pin Protrusion	✓			Dowel Pin Protrusion	
				C-3317-230 O-Ring	

Safeties	✓	Visually Inspect Mtg. Flange and Hub Bore			✓
Spinner Mtg Kit A-2476-(9)	Installed	✓	Included	N/A	
De-ice Kit No. A2386-1	Installed/Ck'd		Included/Ck'd	N/A	✓
Ohms Reading <100K	#1	#2	#3 #4	N/A	✓
Air Chamber Charged per Requirements in Manual 202A			✓	N/A	

Comments:

Inspected By: John Gillan Stamp HP 92 Date: 9-5-02

The approved design data for this propeller incorporates all changes required by applicable Airworthiness Directives.

Hartzell Propeller Inc.
Assembly Inspection Check-off Record
COMPACT PROPELLER

Approved By: S. Wead | Date: 9/4/02 | Form Rev.: B | Exp. ☐

Inspection

Prop S/N	EB 5396B	Model	PHC-C3YF-2UF	W.O. No.	M 593460
Drawing	D3255	Dwg. Rev.	CO	IDS No. 231	IDS Date 9-1.00

Serialized Parts

Builder	Inspector			
			Part No.	Serial No.
Hub Part No. E-7167-2	Bulkhead S/N —	Cwt.	B3202H-5	
Hub Factory No. A61994B		Blade	FC7663B-2R	#1 J77937
	Slip/Slinger Ring S/N —			#2 J77938
Fork Ser. No. ND8357				#3 J77936
Piston Ser. No. C4540	Cylinder S/N E1667			#4

Builder

Check for Leaks ✓ | Check Feather Angle (Record Angle) 84.4

Assembled By: T. Jon | Date: 9-5-02

2nd Check Verification

Blade Angles Checked at 30" Radius — Low Pitch (Within .2 Deg.) 13.4 / 13.6 — High Pitch 18.5½ / 18.7

Friction ✓ | Function Test "0"-"175"psi ✓ | Reverse Pitch NA / ✓

Track/Length (Aluminum .125" max)(Composite .250" max.) T ✓ / L ✓

Verified By: [signature] | Date: 9-5-02

United States of America
Department of Transportation — Federal Aviation Administration

Supplemental Type Certificate

Number SA579GL

This certificate, issued to Shadin Company, Inc.
6950 Wayzata Boulevard
Minneapolis, MN 55426

certifies that the change in the type design for the following product with the limitations and conditions therefor as specified herein meets the airworthiness requirements of Part 3 of the Civil Air Regulations. See Type Certificate Data Sheet 3A16 for complete certification basis.

Original Product — Type Certificate Number: 3A16
Make: Beech
Model: 95-55, 95-A55, 95-B55, 95-B55A, 95-B55B

Description of Type Design Change:
Installation of a Shadin Company Fuel Flow Indicating System in accordance with Shadin Company Report Number 4036, revised September 10, 1986, or other FAA approved revision.

Limitations and Conditions: 1. If the original Fuel Flow Indicator is removed, FAA Approved Flight Manual Supplement dated June 10, 1987 (or other FAA approved revision) is required. 2. This approval should not be extended to other airplanes of this model that incorporate any other previously approved modification, unless it is determined that the interrelationship between this change and any other previously approved modification will introduce no adverse effect on the airworthiness of these airplanes.

This certificate and the supporting data which is the basis for approval shall remain in effect until surrendered, suspended, revoked, or a termination date is otherwise established by the Administrator of the Federal Aviation Administration.

Date of application: July 14, 1981 Date reissued:

Date of issuance: November 30, 1981 Date amended: July 1, 1982, June 10, 1987

By direction of the Administrator

W. F. Horn (Signature)
Manager, Chicago Aircraft Certification Office, ACE-115C, Central Region
(Title)

Any alteration of this certificate is punishable by a fine of not exceeding $1,000, or imprisonment not exceeding 3 years, or both.

This certificate may be transferred in accordance with FAR 21.47.

FAA Form 8110-2 (10-66)

Shadin Co., Inc.
6950 Wayzata Blvd.
Minneapolis, MN 55426

Report # : 4036
Original Date: 14 July 1981
Revision Date: 10 September 1986

PAGE CONTROL CHART

SEC. I.	DATE	REVISION
Drawing List		
4036-21 Installation Schematic	7 Feb 81	A
4036-22 Installation Schematic	20 May 82	A
4036-23 Installation Schematic	20 May 82	A
SEC. II.		
System Description		
Page 1	10 Sep. 86	-
Page 2	10 Sep. 86	-
Page 3	10 Sep. 86	-
Page 4	10 Sep. 86	-
Page 5	10 Sep. 86	-
SEC. III.		
Installation Procedure		
Page 1	10 Sep. 86	-
Page 2	10 Sep. 86	-
Page 3	10 Sep. 86	-
Page 4	10 Sep. 86	-
Page 5	10 Sep. 86	-
Page 6	10 Sep. 86	-
Page 7	10 Sep. 86	-
Page 8	10 Sep. 86	-
SEC. IV.		
Technical Specifications		
Page 1	10 Sep. 86	-
Page 2	10 Sep. 86	-
SEC. V.		
Flight Manual Supplement		
Page 1	10 Sep. 86	-
Page 2	10 Sep. 86	-

FAA
APPROVED
JUN 10 1987
CHICAGO AIRCRAFT
CERTIFICATION OFFICE
CENTRAL REGION

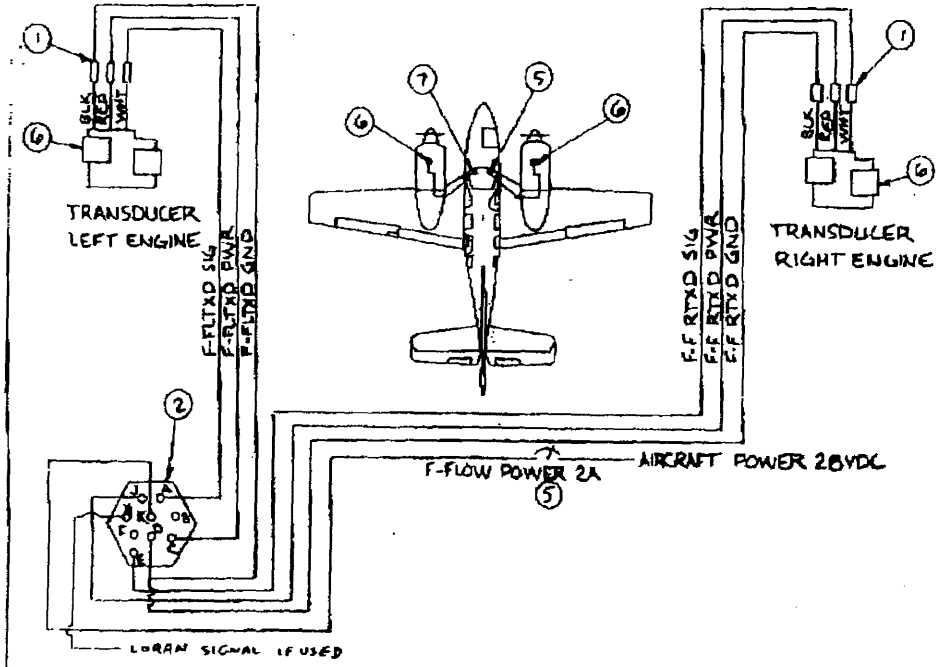

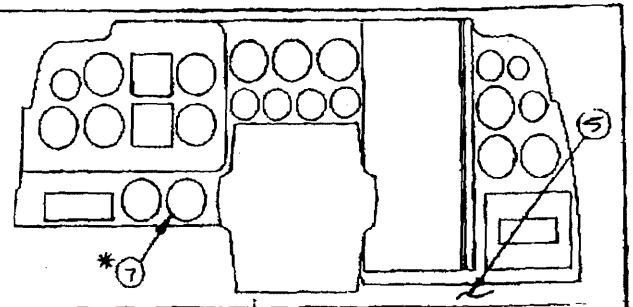

* INDICATOR MAY BE PUT IN OTHER LOCATIONS PROVIDING A CLEAR, FULL VIEW FOR THE PILOT.

P/N	DISPLAY
910502	GAL
910504	LB
910522	GAL
910524	LB
910514	GAL
910532	GAL.-LORAN
910534	LB.-LORAN

LIST OF MATERIALS

ITEM	QTY	PART NO.	DESCRIPTION
1	6	8-14-D	WRISTLOCK
2	1	126-220 AMPHENOL	CONNECTOR, 9PINS, HOOD CLAMP TYPE
3	4	AN507-632R16	6-32×1 MACHINE SCREW
4	120FT	22AWG	WIRE, MIL-W-5086A-1
5	1	PSM-2KUVON	CIRC BRKR 2A MS39067-1 OR EQUIV
6	2	2018/680501	TRANSDUCER
7	1	910XX	DIGITAL FLOW METER
8			
9	4	A8944-632	TINNERMAN NUT, .375

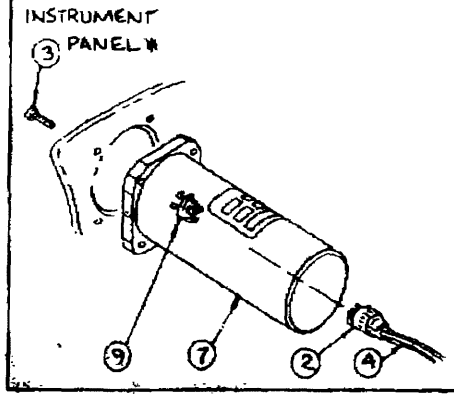

UNLESS OTHERWISE NOTED DIMENSIONS ARE IN INCHES TOLERANCES	ORIGINAL DATE OF DRAWING 2-7-81 DRAFTSMAN D.E. FORD CHECKER ENGINEER SUBMITTED	SHADIN COMPANY, INC. MINNEAPOLIS MINNESOTA 55426 INSTALLATION DIAGRAM (ELECTRICAL) BEECH BARON 95-55, 95-A55, 95-B55, 95-B55A; 95-B55B
MATERIAL:	NEXT ASSEMBLY:	CODE IDENT NO. 4036 - 21 SIZE B REV LTR A SCALE WGT. SHEET 1 OF 1

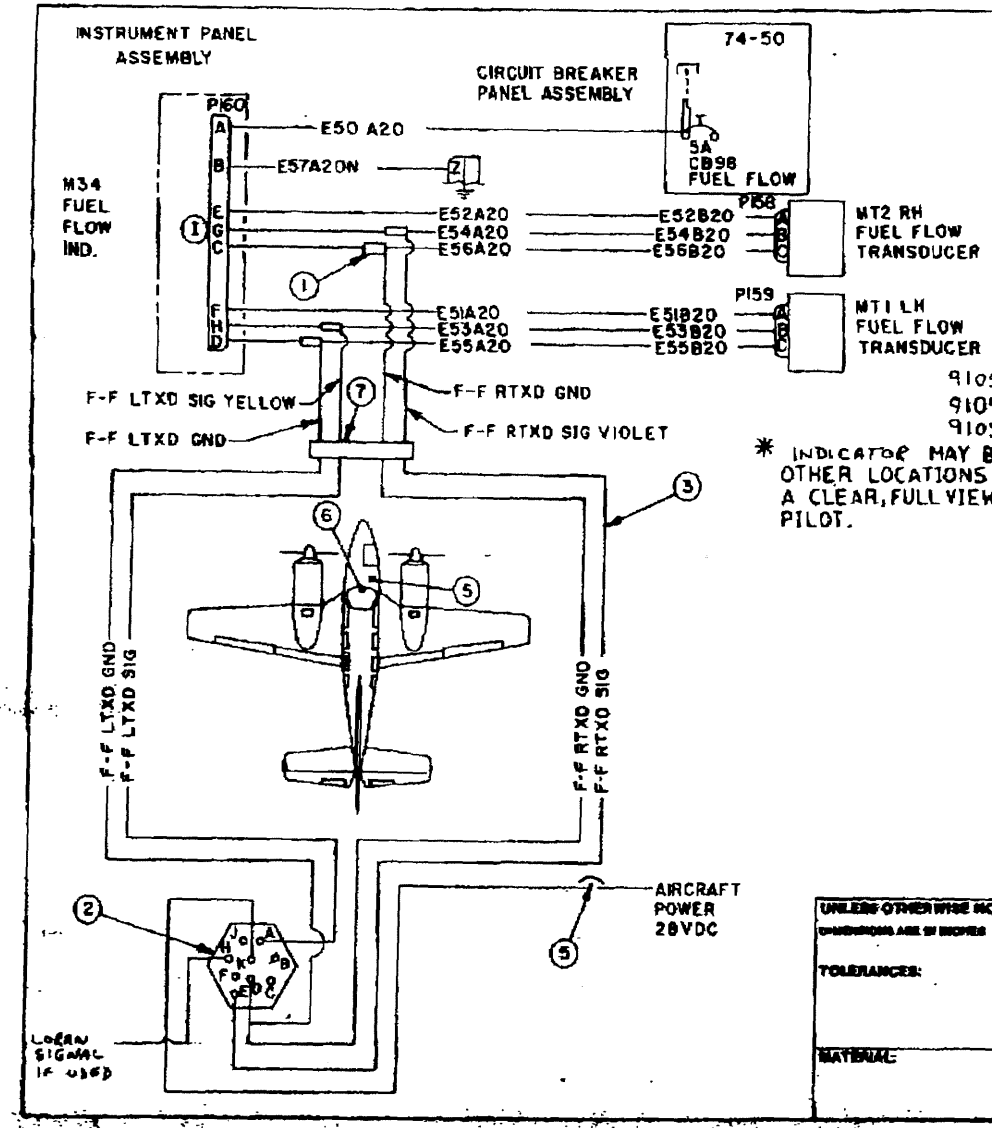

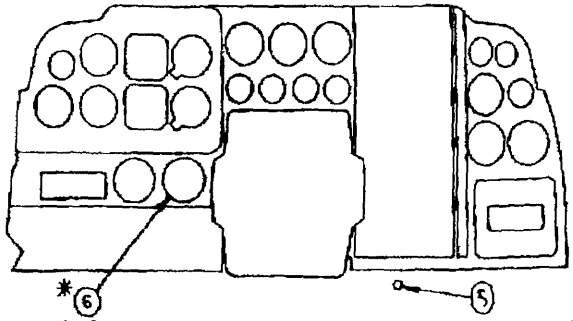

910532 GAL - LORAN *NOTE: INSTRUMENT PANEL MUST BE GROUNDED
910522 GAL VERSION 910502 GAL. VERSION 910504 LB. VERSION
910534 LB. LORAN 910514 GAL. VERSION 910524 LB VERSION

* INDICATOR MAY BE PUT IN OTHER LOCATIONS PROVIDING A CLEAR, FULL VIEW FOR THE PILOT.

LIST OF MATERIALS

F/N	QTY.	PART NO.	DESCRIPTION
1	4	AMP P/N 320559	BUTT SPLICES
2	1	126-220 AMPHENOL	CONNECTOR, 9 PINS HOOD AND CLAMP TYPE
3	12 FT.	22 AWG	WIRE, MIL-W-5086A-1
4			
5	1	PSM-2 KIXON	CIRCUIT BREAKER 2A MS39067-1 OR EQUIV.
6	1	9105XX	DIGITAL FLOW METER
7	1	630502	INTERFACE, HI LEVEL
8			
9			
10			
11			

FOR SERIAL NUMBERS: TC2355 AND UP

UNLESS OTHERWISE NOTED DIMENSIONS ARE IN INCHES
TOLERANCES:
MATERIAL:
ORIGINAL DATE OF DRAWING 5-20-82
DRAFTSMAN R. LEHMAN
CHECKER
ENGINEER
SUPERVISOR
NEXT ASSEMBLY:

SHADIN COMPANY, INC.
INSTALLATION DIAGRAM (ELECTRICAL)
BEECH BARON 95-55, 95-A55, 95-B55, 95-B55A, 95-B55B
(SEE ABOVE FOR SERIAL NUMBERS)
CODE IDENT. NO. 4036 — 22
SIZE B
REV LTR A
SCALE
WGT.
SHEET 1 OF 1

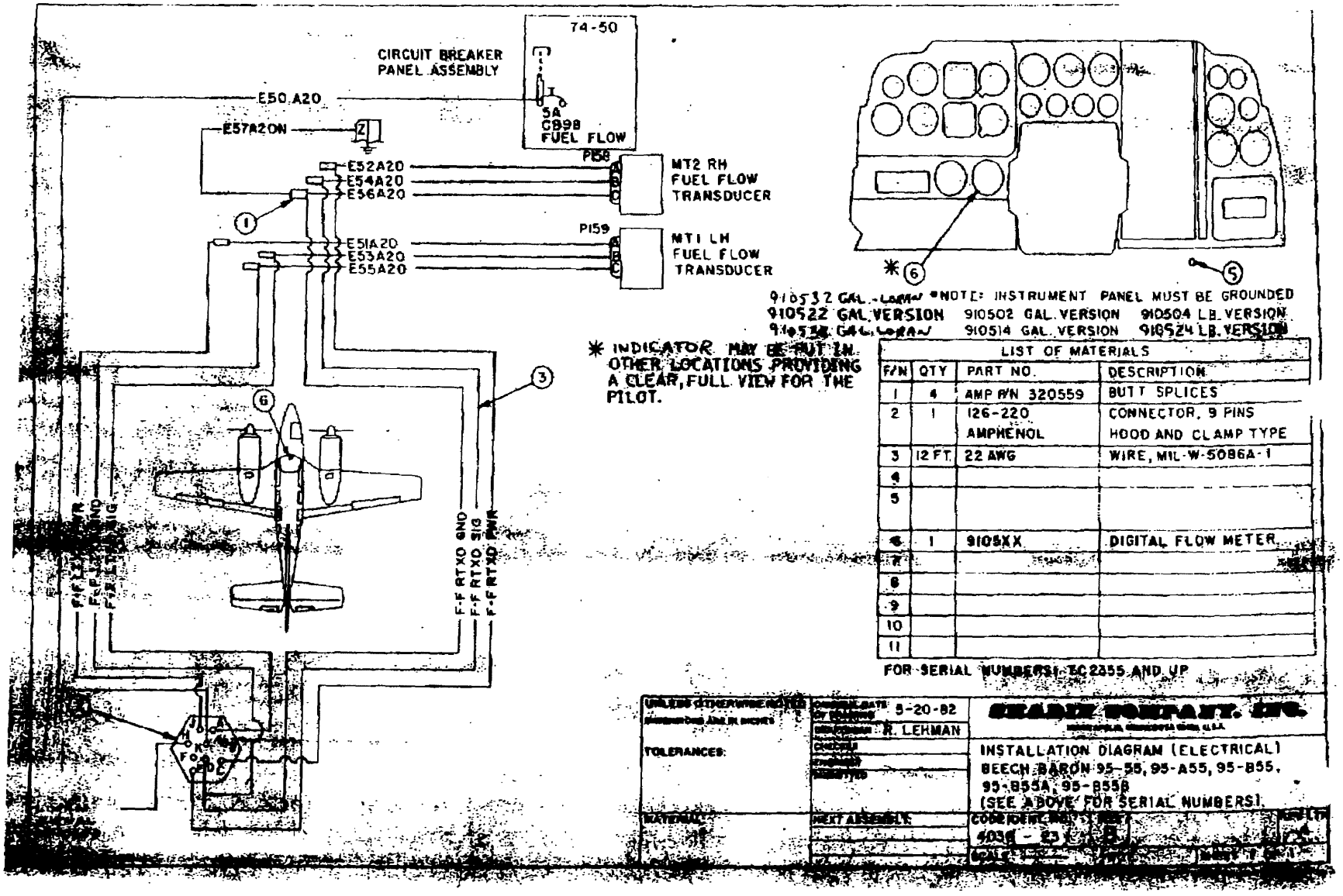
74-50
CIRCUIT BREAKER PANEL ASSEMBLY
E50A20
5A
CB98
FUEL FLOW
E57A20N
E52A20
E54A20
E56A20
P158
MT2 RH FUEL FLOW TRANSDUCER
E51A20
E53A20
E55A20
P159
MT1 LH FUEL FLOW TRANSDUCER
F-F RTXO GND
F-F RTXO SIG
F-F RTXO PWR
* NOTE: INSTRUMENT PANEL MUST BE GROUNDED
910532 GAL. LORAN
910522 GAL. VERSION
910502 GAL. VERSION
910504 LB. VERSION
910534 GAL. LORAN
910514 GAL. VERSION
910524 LB. VERSION
* INDICATOR MAY BE PUT IN OTHER LOCATIONS PROVIDING A CLEAR, FULL VIEW FOR THE PILOT.
LIST OF MATERIALS
F/N QTY PART NO. DESCRIPTION
1 4 AMP P/N 320559 BUTT SPLICES
2 1 126-220 AMPHENOL CONNECTOR, 9 PINS HOOD AND CLAMP TYPE
3 12 FT. 22 AWG WIRE, MIL-W-5086A-1
4
5
6 1 9105XX DIGITAL FLOW METER
7
8
9
10
11
FOR SERIAL NUMBERS: EC 2355 AND UP
5-20-82
R. LEHMAN
TOLERANCES:
INSTALLATION DIAGRAM (ELECTRICAL)
BEECH BARON 95-55, 95-A55, 95-B55, 95-B55A, 95-B55B
(SEE ABOVE FOR SERIAL NUMBERS)
NEXT ASSEMBLY
5038 - 83
B

Report: 4036
Date : 10 Sep 86
Rev. : -
Sec. : II.1

SYSTEM DESCRIPTION (P/N 9105XX)

Digiflo, the Digital Fuel Flow Meter, is designed to provide fuel management information to replace Analog Mechanical Fuel Flow Meters, to maintain a high degree of accuracy (2% or better), and to provide additional functions such as time remaining, fuel used, and fuel remaining.

The system consists of a panel-mounted unit and a fuel flow transducer. The transducer is located in the fuel line between the fuel control unit and the fuel injector for the injected engine and between the engine-driven fuel pump and the carburetor for the carburetted engines. It generates electrical pulses corresponding to the amount of fuel passing through and is designed in such a way that if its rotor is locked it cannot interrupt the fuel flow to the engine.

The panel-mounted unit contains all circuits necessary to count the generated pulses through the microprocessor and to display the fuel flow and other functions. The rate of fuel flow per hour is always displayed at the lower half of the instrument face. The time remaining, fuel used, and fuel remaining are continuously computed and either displayed or stored for later display at the upper display window by pressing the appropriate button.

During power shut-down, the amount of fuel remaining and fuel used are stored into the memory, which is nonvolatile and requires no battery to retain the data.

Time remaining calculations are based on fuel remaining and actual fuel flow, which means that reducing the power will result in increasing the displayed time remaining which at any particular power setting drops below 30 minutes, the "Time Remaining" digits in the display window will start flashing.

The test function will enable the pilot to check the software and hardware against any malfunction through simulating two sample rates and checking the results against stored results. The test is initiated by pressing the test button and requires 13 seconds.

Report: 4036
Date : 10 Sep 86
Rev. : ~
Sec. : II.2

During installation the system is front panel-programmable for the maximum usable fuel. If a full load of fuel is on board, by moving the toggle switch to full fuel position and pressing the enter button, the predetermined amount of fuel is entered into the system. If a partial fuel load has been added, the system is capable of adding the new fuel load to whatever is remaining on board and using the new load for all calculations.

The accuracy of this instrument depends entirely upon the accuracy of the data entered. A periodical checking of the actual fuel onboard will eliminate the accumulation of errors due to evaporation, leaks, theft, etc.

The transducer pulse count (each transducer is marked with it's pulse count) is matched to the microprocessor. The system has been set to match the transducers shipped with the system. If a different pulse count is being used, the instrument must be re-calibrated.

Report: 4036
Date : 10 Sep 86
Rev. : -
Sec. : II.3

SYSTEM DESCRIPTION (91053X)

GENERAL DESCRIPTION

DIGIFLO-L is a Fuel Management System designed to provide complete Fuel Management information under real flight conditions without any manual entry of data (except for the initial fuel on board information). It is connected to the engine Fuel Flow Transducer for Fuel Flow information and to the Apollo II Loran-C receiver serial port for navigation data (ground speed and estimated time enroute).

The system is available with either gallons or pounds read-outs, and it can be installed virtually on any reciprocating or turbine engine by selecting the proper size Fuel Flow Transducer.

The system provides:

1. Specific Range: in NM/Gal. or NM/10 Lb. of Fuel Burned. This is an indication of how efficient is the cruise and the optimum cruise speed could be obtained by selecting the power setting which yields the highest NM Gal.

2. Fuel to Destination: It calculates (under the real wind conditions) the Fuel necessary to reach the destination as selected on the Loran receiver by multiplying the Fuel Flow by the ETE to the destination.

3. Fuel Reserve: The system calculates the amount of Fuel which will be available on board when the aircraft reaches the destination as indicated on the Loran-C receiver way point. This feature provides the pilot with the necessary information to evaluate the reserve fuel situation based on accurate information early enough to take the necessary action. The Reserve Fuel = Fuel on Board minus the fuel to destination.

4. Endurance: The system calculates the time left to fly in hours and minutes based on the fuel on board and fuel consumption. Endurance = Fuel available in gallons divided by the Fuel flow in GPH.

5. Fuel Remaining: The system keeps track of the fuel remaining on board. Fuel Remaining = Initial starting

6. Fuel Used: The system keeps track of the fuel used since the last fuel entry.

7. Not Enough Fuel: The system will flash the display digits when the rotary switch is in the Fuel to Destination position and the Fuel to Destination is more than the Fuel Remaining and will show a negative sign followed by the amount of Fuel Short to reach the destination.

8. Fuel Reserve will be Used: The system will flash the display digits when the rotary switch is in either Fuel to Destination or Reserve Fuel if the endurance is less than the time to reach the destination plus 45 minutes. This warning is intended to alert the pilot that the prevailing conditions will require the use or some of the 45 minute Fuel Reserve.

9. Fuel Flow: The system provides a digital readout of the fuel flow per hour for each engine to a tenth of a gallon under 99.9 gallons and to the nearest gallons at and above 100 gallons. For LB/HR versions the readout is to the nearest LB under 999 LB/HR and to the nearest 10 LB above 999 lb/hr.

SYSTEM COMPONENTS

The system consists of three basic units.

1. The Fuel Flow Transducer which is located in the fuel line to the engine to provide the Fuel Flow information.

2. The Loran receiver to provide the ground speed and the ETE through the serial port.

3. The indicator which includes the Microprocessor, the Interface, the Display and the Display Controls.

DISPLAY

The fuel flow is always displayed at the lower windows. The top window displays all other functions with the priority of the rotary switch functions.

Report: 4036
Date : 10 Sep 86
Rev. : -
Sec. : II.5

SYSTEM MEMORY

The system includes an non volatile memory for retaining the basic settings and the Fuel Remaining and Fuel Used during the power shut down.

TEST FUNCTIONS AND ERROR MESSAGES

A diagnostic software is built into the system and is initiated by pressing the "test" button, the program checks the hardware and the display. If the test is successful a "good" is displayed on the top window if not a "bad" is displayed. The system is considered unserviceable until a corrective action is taken.

At the end of the test routine the system will display the following:

1. Software basic # and revision level.

2. The K factor setting for each engine in the respective flow window (pulse count/gallon). This number must match the pulse count stamped on the flow transducer otherwise an error will occur.

3. The display units (Gal., LB 5.8, LB. 6.7) are part of checking the internal settings.

4. The Loran-C distance as shown on the Loran-C Receiver to check the Data Interface Integrity. If the system is not capable of reading the Loran-C Data the word "LbAd" will be displayed in the top window.

   An "Errl" display is an indication that there is a problem with the nonvolatile memory. This error will cause the unit to seize to function.

   An "Err2" display is an indication that there is a problem with the random access memory. This error will cause the unit to seize to function.

Report: 4036
Date : 10 Sep 86
Rev. : -
Sec. : III.2

6. Using drawing # 4036-21, connect the transducer(s) as indicated. Use wristlock connector and insulating sleeves. After positively identifying the left and right engine wires, solder them to the appropriate pin on the connector plug.

7. If the installer elects to retain the original fuel flow meter skip step 8.

8. If the installer elects to remove the original fuel flow gauge then the fuel lines to the gauge have to be disconnected, drained, removed and the fitting at the firewall has to be capped using AN-929-4 cap. Install the indicator in the same hole on the instrument panel.

9. Install the indicator in the panel.

10. Turn the master switch on and check for 28V. DC at pin K. If no 28V. DC verify wiring, if 28V DC. is verified, turn power off and connect plug to the indicator.

11. Fill the tanks, turn the master switch on, enter the useable fuel into the memory using the information contained in the information booklet. In case of lb. version, multiply the gallons by 5.8 to obtain the total useable pounds.

12. Make the necessary entries in the airframe and engine logs.

Report: 4036
Date : 10 Sep 86
Rev. : -
Sec. : III.3

INSTALLATION PROCEDURE

GENERAL

A complete thorough familiarization and understanding of the system is necessary before commencing the installation. All work must conform to A. C 43.13-1A ch. 11, Sec. 2, 3, 7 requirements. This procedure is to be used if the original fuel flow indicator is retained. Use drawing # 4036-22. Only S/N TC2355 and up is eligible for this procedure.

PROCEDURE

1. Refer to Beech wiring diagram (indicating - Fuel Flow System).

2. Switch off battery master switch. Gain access to the instrument panel back, by removing the instrument panel padded glare shield.

3. Disconnect the Fuel Flow Indicator Connector. Identify the following wires:
   1 - wire #E53A20 as L.H. fuel flow signal
   2 - wire #E55A20 as L.H. fuel flow signal
   3 - wire #E54A20 as R.H. fuel flow signal
   4 - wire #E56A20 as R.H. fuel flow signal

4. The connector P/N 126-220 and the interface P/N 630502 are wired and supplied as one unit. Cut the identified wires at least 6 inches from the connector.

5. Insert the wire coming from the indicator into the butt connector and crimp, insert the wire coming from the transducer and the colored wire coming from the interface into the other side of the butt connector and crimp.

6. Reconnect all four wires using above procedure and route them all to the intended location of the Digital Fuel Flow Meter.

7. Solder the connector to the wires using drawing # 4036-22.

Report: 4036
Date : 10 Sep 86
Rev. : -
Sec. : III.4

8. Mount the circuit breaker to the right hand sub-panel and connect it to the DC buss, identify the circuit breaker by engraving "Fuel Flow Digital", wire it to pin K in the indicator.

9. Mount the indicator in the intended location and plug it.

10. Fill the tanks and turn the master switch on. Enter the useable gallons of fuel into the memory using the information in the information booklet. In case of using the lb. version, multiply the total useable gallons by 5.8 to obtain the total useable lbs.

11. Make necessary entry into the airframe and engine logs.

Report: 4036
Date : 10 Sep 86
Rev. : -
Sec. : III.5

INSTALLATION PROCEDURE

GENERAL

A complete thorough familiarization and understanding of the system is necessary before commencing the installation. All work must conform to A. C 43.13-1A ch. 11, Sec. 2, 3, 7 requirements. This procedure is to be used if the original fuel flow indicator is being replaced by the digital indicator. Use drawing # 4036-23. Only S/N TC2355 and up is eligible for this procedure.

PROCEDURE

1. Refer to Beech wiring diagram (indicating - Fuel Flow System).

2. Switch off battery master switch. Gain access to the instrument panel back, by removing the instrument panel padded glare shield.

3. Disconnect the Fuel Flow Indicator Connector. Identify the following wires:
   1 - wire #E53A20 as L.H. fuel flow signal
   2 - wire #E55A20 as L.H. fuel flow signal
   3 - wire #E54A20 as R.H. fuel flow signal
   4 - wire #E56A20 as R.H. fuel flow signal

4. Use drawing # 4036-23, clip P160 connector as close as possible to the rubber grommet.

5. Insert the wire coming from the indicator into the butt connector and crimp, insert the wire coming from the transducer into the other side of the butt connector and crimp.

6. Insert all four wires using above procedure and route

United States of America

Department of Transportation — Federal Aviation Administration

Supplemental Type Certificate

Number SE443GL

This certificate issued to Shadin Company, Inc.
14280 N. 23rd Avenue
Plymouth, Minnesota 55447-4910

certifies that the change in the type design for the following product with the limitations and conditions therefor as specified hereon meets the airworthiness requirements of Part 13 *of the* Civil Air *Regulations.* See Type Certificate Data Sheet E5CE for complete certification basis.

Original Product — Type Certificate Number: E5CE

Make: Teledyne Continental Motors

Model: IO-520-A, IO-520-B, IO-520-D, IO-520-F, IO-520-J, IO-520-K, IO-520-L, IO-520-BA, and IO-520-BB

Description of Type Design Change:

Incorporation of a fuel flow transducer in accordance with Shadin Company Report Number 4022, revised May 16, 1989, or subsequent FAA Approved revision.

Limitations and Conditions:

This approval should not be extended to other engines of these models on which other previously approved modifications are incorporated, unless it is determined by the installer that the interrelationship between this change and any of those other previously approved modifications will introduce no adverse effect upon the airworthiness of those engines.

This certificate and the supporting data which is the basis for approval shall remain in effect until surrendered, suspended, revoked, or a termination date is otherwise established by the Administrator of the Federal Aviation Administration.

Date of application: June 24, 1980

Date of issuance: September 15, 1980

Date reissued:

Date amended: August 10, 1981; May 21, 1984; June 30, 1989

By direction of the Administrator

Donald P. Michal

Donald P. Michal, Manager
Chicago Aircraft Certification Office

(Signature)

(Title)

Any alteration of this certificate is punishable by a fine of not exceeding $1,000, or imprisonment not exceeding 3 years, or both.

This certificate may be transferred in accordance with FAR 21.47.

FAA Form 8110-2 (10-68)

Shadin Company, Inc.
14280 North 23rd Avenue
Plymouth, MN 55447-4910

4022

Report: #4022
Original Date: 16 July 1990
Revision Date: 5 October 1991
Subject: Fuel Flow Transducer Addition
Teledyne Continental
IO-520-B, -BA, -BB, -A, -D, -F,
-J, -K, -L

FAA
APPROVED

NOV 20 1991

CHICAGO AIRCRAFT
CERTIFICATION OFFICE
CENTRAL REGION

27

FAA
APPROVED
NOV 20 1991
CHICAGO AIRCRAFT
CERTIFICATION OFFICE
CENTRAL REGION
L7

Shadin Company, Inc.
14280 North 23rd Avenue
Plymouth, MN 55447-4910

REPORT #4022

Original Date: 16 July 1980
Revision Date: 5 October 1991

PAGE CONTROL CHART

SEC. I.	DATE	REVISION
Drawing List		
4022-D-20 Transducer Installation	29 Jun. 80	B
4022-21 Transducer Installation	24 Jan. 84	A
4022-22 Transducer Installatio	24 Jan. 84	B
SEC. II.		
System Description		
Page 1	12 Dec. 84	-
Page 2	12 Dec. 84	-
SEC. III.		
Installation Procedure		
Page 1	12 Dec. 84	-
Page 2	12 Dec. 84	-
Page 3	12 Dec. 84	-
Page 4	12 Dec. 84	-
Page 5	12 Dec. 84	-
Page 6	12 Dec. 84	-
SEC. IV.		
Technical Specifications		
Page 1	24 Jun. 80	A

LIST OF MATERIALS			
F/N	QTY	PART NO.	DESCRIPTION
1	1	201-B	TRANSDUCER
2	1	543003	BRACKET, MOUNTING
3	2	AN816-4-4	NIPPLE, FLARED, PIPE THREAD
4	2	816-4	AEROQUIP HOSE FITTING
5	15"	601-4	AEROQUIP HOSE
6	40¼"	303-4	AEROQUIP HOSE
7	14"	AE102/624-8	AEROQUIP FIRE SLEEVE
8	2	A-3122-14-1J	STRATOFLEX SPEED CLAMP
9	1	610504	FIRE SHIELD BOX
10	2	AN 4-12A	BOLT
11	2	MS20365-428	NUT
12	2	AN960-416L	WASHER

1 - QUANTITIES ARE FOR ONE ENGINE

2 - NO TEFLON TAPE SEAL IS ALLOWED

NOTE:
FIRE SLEEVE SHOWN CUT-AWAY FOR PURPOSES OF ILLUSTRATION ONLY.

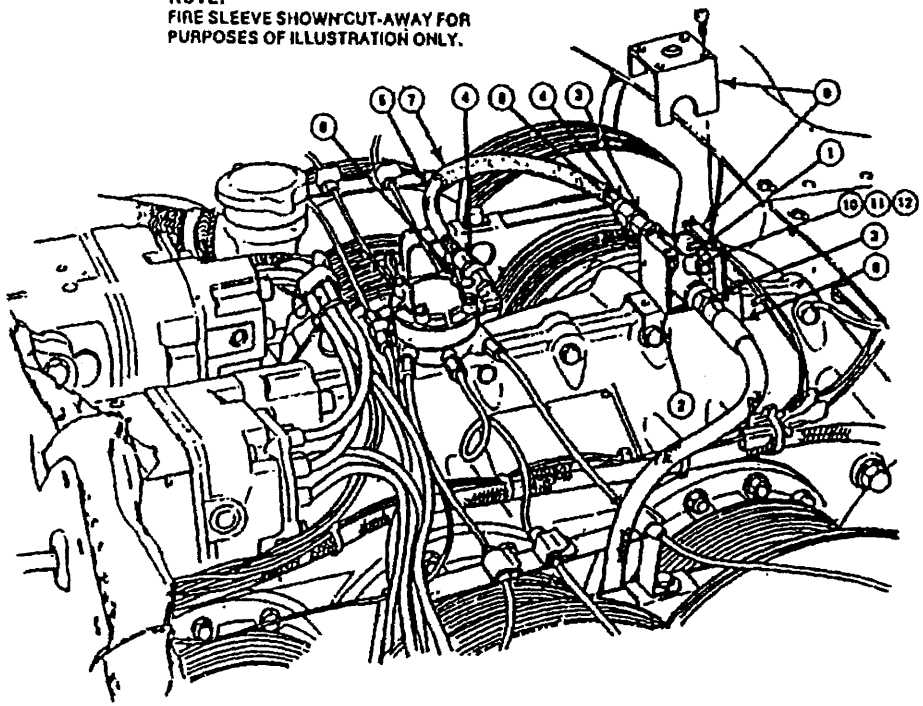

UNLESS OTHERWISE NOTED DIMENSIONS ARE IN INCHES TOLERANCES:	ORIGINAL DATE OF DRAWING 6-29-80 DRAFTSMAN CHECKER ENGINEER SUBMITTED	SHADIN COMPANY, INC. MINNEAPOLIS MINNESOTA 55426 FUEL FLOW TRANSDUCER ADDITION TELEDYNE CONTINENTAL IO-520-B, -BA, -BB
MATERIAL:	NEXT ASSEMBLY:	CODE IDENT NO. 4022-D-20 / SIZE B / REV LTR B
		SCALE / WGT. / SHEET 1 OF 1

LIST OF MATERIALS

F/N	QTY	PART NO.	DESCRIPTION
1	1	660526	TRANSDUCER, FUEL FLOW
2	1	543003	BRACKET, MOUNTING
3	1	543005	BRACKET, MOUNTING
4	2	816-4	AEROQUIP HOSE FITTING
5	15"	601-4	AEROQUIP HOSE
6	REF.	303-4	AEROQUIP HOSE (AS REQUIRED)
7	14"	AE102/624-8	AEROQUIP FIRE SLEEVE
8	2	A-3122-14-1J	STRATOFLEX SPEED CLAMP
9	4	AN501A10-8	BOLT 10-32 x ½"
10	2	AN 4-4A	BOLT
11	2	MS20365-428	NUT
12	2	AN960-416L	WASHER
13	2	578168	REDUCER, -8 TO -4 FLARE
14	1	MS3106A10SL-3S	CONNECTOR, 3 PIN
15	1	690501	PICKUP ASS'Y

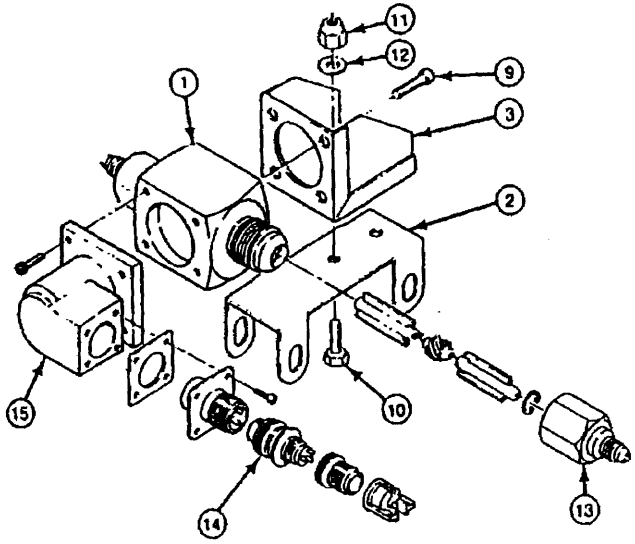

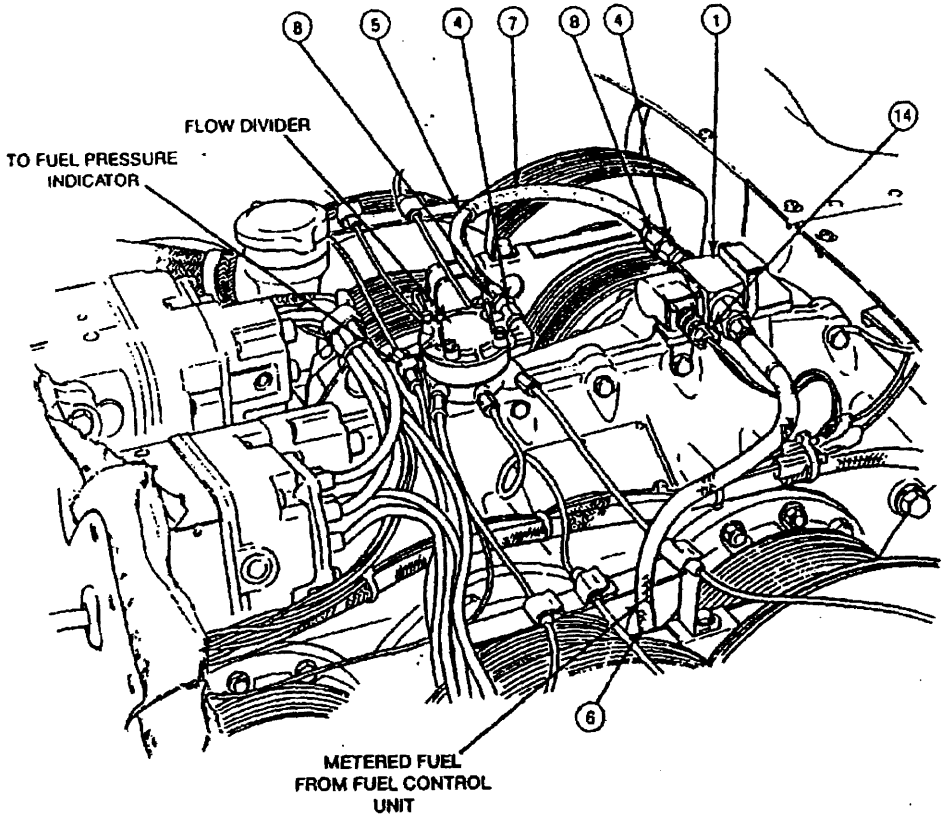

UNLESS OTHERWISE NOTED DIMENSIONS ARE IN INCHES TOLERANCES:	ORIGINAL DATE OF DRAWING JAN 24 - 84	SHADIN COMPANY, INC. MINNEAPOLIS MINNESOTA 55426
	DRAFTSMAN	FUEL FLOW TRANSDUCER ADDITION TELEDYNE CONTINENTAL
	CHECKER	
	ENGINEER	
	SUBMITTED	IO-520-B, -BA, -BB
MATERIAL:	NEXT ASSEMBLY:	CODE IDENT NO. 4022-21 / SIZE B / REV LT A
		SCALE / WGT. / SHEET 1 OF 1

LIST OF MATERIALS			
F/N	QTY.	PART NO.	DESCRIPTION
1	1	201-B/580501	TRANSDUCER
2	1	543003	BRACKET, MOUNTING
3	1	AN816-4-4	NIPPLE, FLARED, PIPE THREAD
4	2	816-4	AEROQUIP HOSE FITTING
5	14"	601-4	AEROQUIP HOSE
6	40.5"	303-4	AEROQUIP HOSE
7	14"	AE102/624-8	AEROQUIP FIRE SLEEVE
8	1	AN742-D24C	CLAMP
9	1	610504	FIRE SHIELD BOX
10	33'	AE102/624-18	AEROQUIP FIRE SLEEVE
11	33'	MIL-H-8000	HOSE 3/4 ID
12	1	AN823-4	FITTING, ELBOW 45°
13	1	AN912-1	FITTING, BUSHING ¼-⅛

NOTE: QUANTITIES ARE FOR ONE ENGINE.
NO TEFLON TAPE SEAL IS ALLOWED

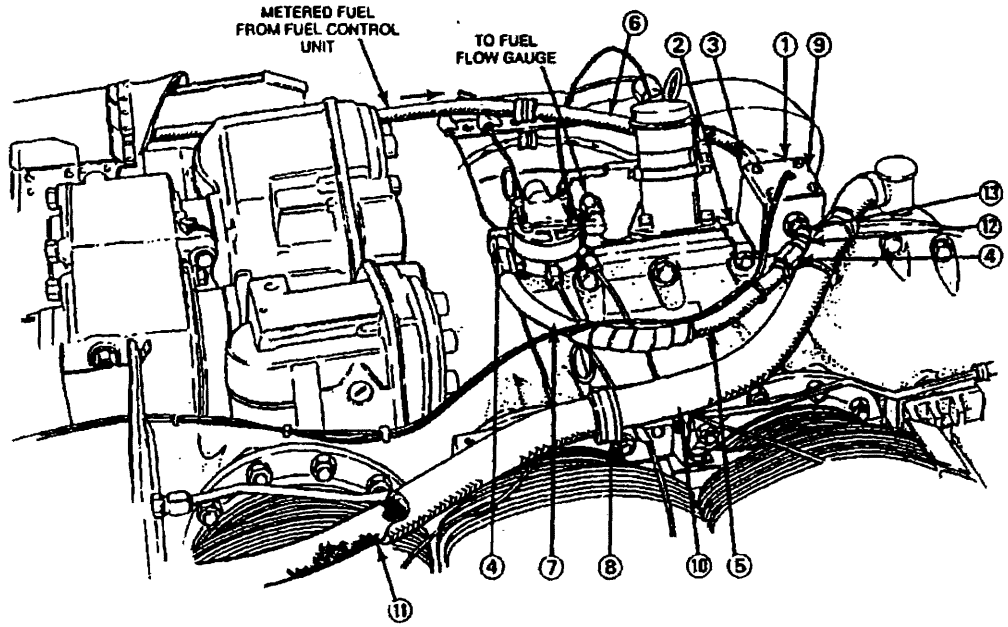

UNLESS OTHERWISE NOTED DIMENSIONS ARE IN INCHES TOLERANCES:	ORIGINAL DATE OF DRAWING Jan 24, 1984 DRAFTSMAN CHECKER ENGINEER SUBMITTED	SHADIN COMPANY, INC. MINNEAPOLIS, MINNESOTA 55436 U.S.A. FUEL FLOW TRANSDUCER ADDITION TELEDYNE CONTINENTAL IO-520-A,D,F,K,L,J
MATERIAL:	NEXT ASSEMBLY:	CODE IDENT. NO 4022-22 SIZE B REV LTR B SCALE WGT. SHEET OF

SYSTEM DESCRIPTION

Digiflo, The Digital Fuel Flow Meter, is designed to replace Analog Mechanical Pressuretype Fuel Flow Meters. It eliminates the hazardous fuel lines from behind the panel. It maintains a high degree of accuracy (+/- 2% or better) and provides additional functions such as time remaining, fuel used, and fuel remaining.

The system consists of a fuel flow transducer, located between the fuel control unit and fuel flow divider which generates electrical pulses corresponding to the amount of fuel passing through. The transducer is designed in such a way that if the rotor is blocked it cannot interrupt the fuel flow to the engine.

The panel mounted unit contains all circuits necessary to count the generated pulses through the microprocessor and to display the fuel flow and other functions. The fuel flow in gallons per hour is always displayed at the left window. The time remaining, gallons used, and gallons remaining are continuously computed and either displayed or stored for later display. The time remaining is displayed at the right display window. Gallons remaining and gallons used share the same right window and either can be displayed by pressing the appropriate button.

During power shut-down, the amount of fuel remaining and fuel used is stored into the memory, which is nonvolatile, and requires no battery.

Time remaining calculations are based on fuel remaining and actual fuel flow, which means that reducing the power or leaning the mixture will result in increasing the time remaining.

If the calculated time remaining at any particular power setting drops below 30 minutes, the "Time Remaining" digits in the display window will start flashing.

The test function will enable the pilot to check the software and hardware against any malfunction by running a diagnostic software program.

The accuracy of this instrument depends entirely upon the accuracy of the data entered. A periodical checking of the actual fuel onboard will eliminate the accumulation of errors due to evaporation, leaks, theft, etc.

The indicator K factor is matched with the flow transducer pulse count. If the transducer needs to be replaced, a new one with the same pulse count should be used or an error could occur.

Report: 4022
Date: 12 December 1984
Rev.: -
Sec.: III.1

INSTALLATION PROCEDURE

For the -B, -BA, -BB engines with fuel flow transducer P/N 680501. Refer to Dwg. #4022-D-20.

GENERAL

A complete thorough familiarization and understanding of the system is necessary before commencing the installation. All work must conform with A.C. 43.13 1A ch. 11 Sec. 2.

PROCEDURE

1) Identify the engine dash number and use the appropriate drawing. The transducer's dash number should match the dash number stamped on the instrument housing.

2) Shut off DC power, fuel valves and mixture controls.

3) Gain access to the top front section of the engine, locate and remove the injection pump to the flow divider hose. Fabricate new hose using approx. 40" (length could vary from model to model) piece of 303 Aeroquip hose. Install the 491-4 end fittings per.

4) Rotate the 90' elbow (MS-51504) at the inlet of the flow divider 180' to be pointing to the port side of the engine.

5) Use 14" piece of 601 hose to fabricate a new hose. Install the Aeroquip 816-4 fittings at each end using the attached instructions. Install the fire sleeves and clamp it after proof testing.

6) Remove the crankcase bolts. Install the transducer assembly on the engine as per 4022-D-20 with the inlet port pointing to the right, retighten, (refer to Teledyne Continental Overhaul Manual for recommended torque)

7) Connect the wire harness to the transducers using the B-14-D wristlocks with plastic sleeves to insulate and secure with tiewraps.

8) Turn the master switch on, fuel selectors on, run booster pumps and check for leaks.

9) Start the engine and check the metered and unmetered fuel pressure. Readjust if necessary following airframe and engine manufacturers instructions.

10) Make necessary entry into the engine logs.

Report: 4022
Date: 12 December 1984
Rev.: -
Sec.: III.3

==========

INSTALLATION PROCEDURE

For the -B, -BA, -BB engines with fuel flow transducer P/N 660526. Refer to Dwg. #4022-21.

GENERAL

A complete thorough familiarization and understanding of the system is necessary before commencing the installation. All work must conform with A.C. 43.13 1A ch. 11 Sec. 2.

PROCEDURE

1) Identify the engine dash number and use the appropriate drawing. The transducer's dash number should match the dash number stamped on the instrument housing.

2) Shut off DC power, fuel valves and mixture controls.

3) Gain access to the top front section of the engine, locate and remove the injection pump to the flow divider hose. Fabricate new hose using approx. 40" (length could vary from model to model) piece of 303 Aeroquip hose. Install the 491-4 end fittings.

4) Rotate the 90' elbow (MS-51504) at the inlet of the flow divider 180' to be pointing to the port side of the engine.

5) Use 14" piece of 601 hose to fabricate a new hose. Install the Aeroquip 816-4 fittings at each end using the attached instructions. Install the fire sleeves and clamp it after proof testing.

6) Remove the crankcase bolts. Install the transducer assembly on the engine as per 4022-21 with the inlet port pointing to the right, retighten, (refer to Teledyne Continental Overhaul Manual for recommended torque)

7) Connect the wire harness to the transducers using the MS3106A10SL-3S Connector.

8) Turn the master switch on, fuel selectors on, run booster pumps and check for leaks.

9) Start the engine and check the metered and unmetered fuel pressure. Readjust if necessary following airframe and engine manufacturers instructions.

10) Make necessary entry into the engine logs.

Report: 4022
Date: 12 December 1984
Rev.: -
Sec.: III.5

==========

INSTALLATION PROCEDURE

For the -A, -D, -F, -K, -L engines with flow transducer P/N 680501. Refer to Dwg. #4022-22.

GENERAL:

A complete thorough familiarization and understanding of the system is necessary before commencing the installation. All work must conform with A.C. 43.13-1A ch. 11 Sec. 2.

PROCEDURE:

1) Identify the engine dash number and use the appropriate drawing. The transducer's dash number should match the dash number stamped on the instrument housing.

2) Shut off DC power, fuel valves and mixture controls, remove breather tube and replace with 33" MIL-H-600 3/4" ID hose covered with Aeroquip AE 102/624-18 fire sleeve. Route the hose as shown in Dwg. 4022-22 using a 742-D24C clamp to support the hose assembly.

3) Gain access to the top front section of the engine, locate and remove the injection pump to the flow divider hose. Fabricate new hose using 40 1/2" piece of 303 Aeroquip hose. Install the 491-4 end fitting per the attached instructions.

4) Rotate the 90 degree elbow (MS-51504) at the inlet of the flow divider 180 degrees to be pointing to the port side of the engine.

5) Use 14" piece of 601 hose to fabricate a new hose. Install the Aeroquip 816-4 fittings at each end. Install the fire sleeves and clamp it after proof testing.

6) Install tighten the AN816-4-4 fitting and the bushing and fitting assembley.

7) Remove the crankcase bolts. Install the transducer assembly into the engine as per 4022-22 with the inlet pointing to the right, retighten, refer to Teledyne Continental Overhaul Manual for recommended torque. Reconnect the 303 hose to the inlet of the transducer and the 14" 601 hose between the transducer outlet and the flow divider.

8) Connect the wires to the transducers using the B-14-D wristlocks, with plastic sleeves to insulate and secure them with tie wraps.

9) Turn the master switch on, fuel selectors on, run the booster pumps and check for leaks.

10) Start the engine and check the metered and unmetered fuel pressure. Readjust if necessary following airframe and engine manufacturer instruction.

11) Make necessary entry into the engine logs.

TECHNICAL SPECIFICATIONS

INDICATOR SPECIFICATIONS

P/N:	9105xx or 9120xx
Maximum useable fuel:	900 Gallons
Maximum altitude:	40,000 ft.
Operating temperature:	-30 deg. C to 50 deg. C
Humidity:	up to 95% @ 32 deg. C
Flow Range: When used with P/N 680501	.6-60 GPH/Engine
When used with P/N 660526	1.5-70 GPH/Engine

ELECTRICAL RATING

Input voltage:	14-28 Volt D.C
Input current:	400 ma @ 14V 28V DC

MECHANICAL RATING

Vibration:	5g
Weight:	Panel Unit: 15 oz.

TRANSDUCER SPECIFICATIONS

Fuel:	Aviation gasoline	
P/N:	680501	660526
Linear Flow Range:	0.6-60 GPH	7-70 GPH
Linearity Across Flow Range, percent of reading:	+/-2%	+/-1%
Average K Factor (pulses/gal):	84,000	4,000
Pressure Drop: @ 15 GPH	.3 psi	.2 psi
@ 30 GPH	1.2 psi	.75 psi
@ 60 GPH	2.6 psi	1.7 psi
Minimum Bursting Pressure:	2000 psi	16000 psi
Temperature Range:	-65'C/125'C	same
Life Expectancy:	5,000 hr.	12000 hr.
Spec:	TSO C-44a	TSO C-44a
Weight:	5 oz.	5 oz.

STOP

YOUR AIRCRAFT MAY HAVE OPTIONAL EQUIPMENT INSTALLED THIS COULD CHANGE THE LENGTH OF FUEL LINES REQUIRED TO INSTALL THIS SYSTEM. PLEASE CHECK YOUR AIRCRAFT FOR PROPER LENGTH BEFORE CUTTING OR BUYING FUEL LINES.

United States of America

Department of Transportation — Federal Aviation Administration

Supplemental Type Certificate

Number SE552GL

This certificate issued to Shadin Company, Inc.
14280 N. 23rd Avenue
Plymouth, Minnesota 55447

certifies that the change in the type design for the following product with the limitations and conditions therefor as specified hereon meets the airworthiness requirements of Part 13 *of the* Civil Air *Regulations.* See Type Certificate Data Sheet No. 3E1 for complete certification basis.

Original Product — Type Certificate Number: 3E1

Make: Teledyne Continental Motors

Model: IO-470-D, IO-470-J, IO-470-K, IO-470-L, IO-470-N, IO-470-U, IO-470-V, IO-470-VO, IO-470-E, IO-470-S

Description of Type Design Change:

Incorporation of a Fuel Flow Transducer in accordance with Shadin Company Report Number 4029, dated November 5, 1990, or later FAA Approved revisions.

Limitations and Conditions:

This approval should not be extended to other engines of these models on which other previously approved modifications are incorporated, unless it is determined by the installer that the interrelationship between this change and any other previously approved modifications will introduce no adverse effect on the airworthines of these engines.

This certificate and the supporting data which is the basis for approval shall remain in effect until surrendered, suspended, revoked, or a termination date is otherwise established by the Administrator of the Federal Aviation Administration.

Date of application: July 14, 1981

Date of issuance: August 25, 1981

Date reissued:

Date amended: January 24, 1991

By direction of the Administrator

Donald P. Michal
(Signature)

Donald P. Michal, Manager
Chicago Aircraft Certification Office
(Title)

Any alteration of this certificate is punishable by a fine of not exceeding $1,000, or imprisonment not exceeding 3 years, or both.

This certificate may be transferred in accordance with FAR 21.47.

Shadin Company, Inc.
14280 North 23RD Avenue
Plymouth, MN 55447

Report: #4029
Date July 14, 1981
Revision Date : Nov. 5, 1990
Subject: Fuel Flow Transducers
Addition
Teledyne Continental
IO-470-D, U, V, VO, J,
N, K, L, E, S

F A A
A P P R O V E D

JAN 24 1991

CHICAGO AIRCRAFT
CERTIFICATION OFFICE
CENTRAL REGION

L7

Shadin Company, Inc.
14280 North 23RD Avenue
Plymouth, MN 55447

FAA
APPROVED
JAN 24 1991
CHICAGO AIRCRAFT
CERTIFICATION OFFICE
CENTRAL REGION
L7

REPORT #4029

Original Date: 14 July, 81
Revision Date: 05 November, 90

PAGE CONTROL CHART

Shadin Co., Inc.
Report #: 4029
Date: Nov. 5, 1990
Rev: A
Sec.: II.1

==========

DIGITAL FUEL FLOW METER
SYSTEM DESCRIPTION

Digiflo, the Digital Fuel Flow Meter, is designed to replace Analog Mechanical Fuel Flow Meters. It eliminates the fuel lines in such instruments from behind the panel. Digiflo can be used for both injected and or pressure carburated engines. It maintains a high degree of accuracy (2 percent or better) which was not possible before. Digiflo provides additional functions such as time remaining, gallons used and gallons remaining.

The system consists of a fuel flow transducer, located in the fuel control unit and fuel flow divider which generates electrical pulses corresponding to the amount of fuel passing through. The transducer is designed in such a way that if the rotor is blocked it cannot interrupt the fuel flow to the engine.

The panel mounted unit contains all circuits necessary to count the generated pulses thorough the microprocessor and to display the fuel flow and other functions using permanently installed software. The fuel flow in gallons per hour is always displayed at the lower half of the instrument face. The time remaining, gallons used, and gallons remaining are continuously computed and either dislodged or stored for later display. The time remaining is displayed at the upper display window. Gallons remaining and gallons used share the same upper window and either can be displayed by pressing the appropriate button.

During power shut-down, the amount of fuel remaining is stored into the non volatile memory, which does not require a battery to retain the data.

Time remaining calculations are based on gallons remaining and actual fuel flow, which means that reducing the power or leaning the mixture will result in increasing the time remaining.

If the calculated time remaining at any particular power setting drops below 60 minutes, the "Time Remaining" digits in the display window will start flashing.

The test function will enable the pilot to check the software and hardware against any malfunction through simulating two sample rates and checking the results against stored results.

Shadin Co., Inc.
Report: 4029
Date: Nov. 5, 1990
Rev.: A
Sec.: II.2

==========

The accuracy of this instruments depends entirely upon the accuracy of the data entered. A periodical check of the actual fuel onboard will eliminate the accumulation of errors due to evaporation, leaks, theft, etc.

To match the transducer pulse count (K factor), (each transducer is marked with a dash number), to the microprocessor and to adapt it for use to a single or twin engines, one or two transducers per engine, a 6 pole DIP switch has been provided on the top board. The switch has been set to match the transducers shipped with the system. In case a transducer with a different dash number is being used, the instrument has to be recalibrated.

PARTS LIST

ITEM	QTY.	PART NO.	DESCRIPTION
1	1	201-B/680501	TRANSDUCER
2	1	543003	BRACKET, MOUNTING
3	1	AN816-4-4	NIPPLE, FLARED, PIPE TH'D
4	3	816-4	AEROQUIP HOSE FITTING
5	14"	601-4	AEROQUIP HOSE
6	40.5"	303-4	AEROQUIP HOSE
7	14"	AE102/624-8	AEROQUIP FIRE SLEEVE
8	2	AN742-D24C	CLAMP
9	1	610504	FIRE SHIELD BOX
10	33'	AE102/624-18	AEROQUIP FIRE SLEEVE
11	33'	MIL-H-6000	HOSE - 3/4" ID
12	1	AN 823-4	FITTING, ELBOW 45°
13	1	AN 912-1	FITTING, BUSHING 1/4 - 1/8

NOTE: QUANTITIES SHOWN ARE FOR ONE ENGINE.

NO TEFLON TAPE SEALS ALLOWED ON FITTINGS.

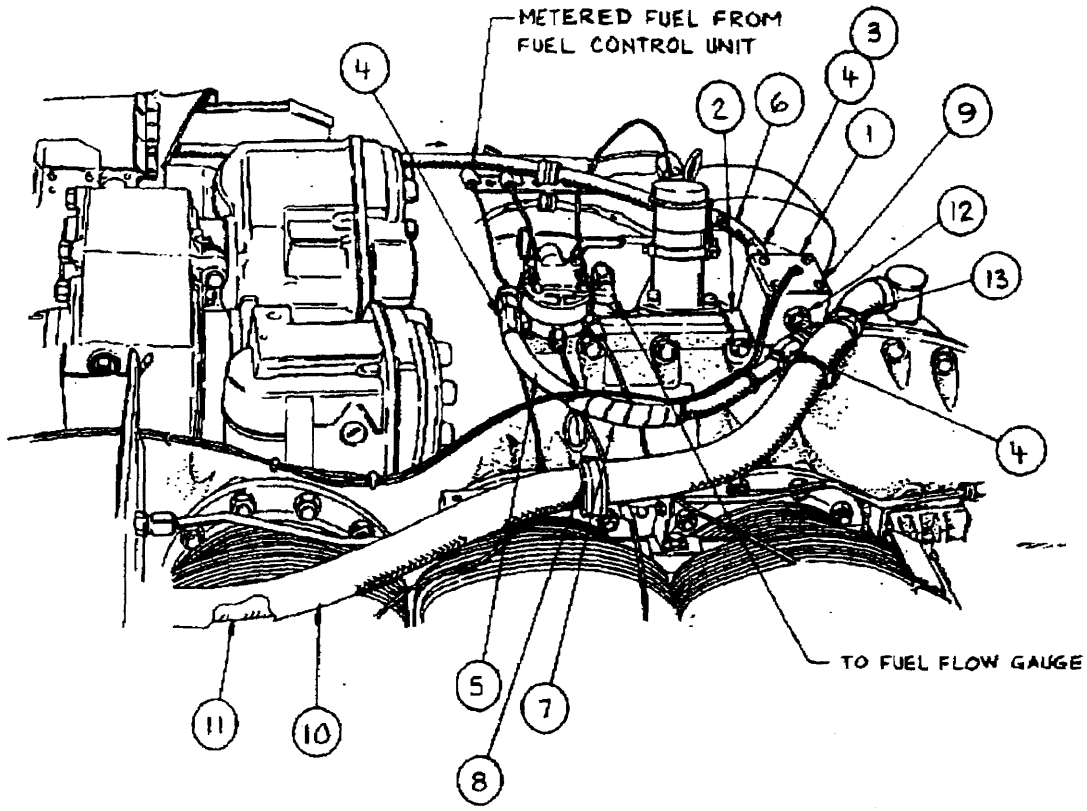

REV. A NOV. 5 '90 REDRAWN - ADD -E,-S ENGINE

UNLESS OTHERWISE NOTED DIMENSIONS ARE IN INCHES	ORIGINAL DATE OF DRAWING 6-14-81	SEABEE COMPANY, INC. MINNEAPOLIS, MINNESOTA 55417, U.S.A.
	DRAFTSMAN J BEAUFOR	
TOLERANCES:	CHECKER	FUEL FLOW TRANSDUCER ADDITION
	APPROVED	
	SUBMITTED	TELEDYNE CONTINENTAL IO-470-C,D,J,K,L,U,V,VO,N,E,S
MATERIAL:	NEXT ASSEMBLY:	CODE IDENT. NO. 4029-21 / SIZE B / REV L A
		SCALE — / WGT. / SHEET 1 OF 1

Shadin Co., Inc.
Report: 4029
Date: Nov. 5, 1990
Rev.: A
Sec.: III.1

==========

INSTALLATION PROCEDURE

GENERAL

A complete thorough familiarization and understanding of the system is necessary before commencing the installation. All work must conform with A.C. 43.13 1A ch. 11 sect. 2.

PROCEDURE

1) Identify the engine dash number and use the appropriate drawing. The transducer's dash number should match the dash number stamped on the instrument housing.

2) Shut off DC power, fuel valves and mixture controls, remove breather tube and replace with 33" MIL-H-600 3/4" ID hose covered with Aeroquip AE 102/624-18 fire sleeve. Route the hose as shown in Dwg. 4029-21 using a 742-D24C clamp to support the hose assembly.

3) Gain access to the top front section of the engine, locate and remove the injection pump to the flow divider hose. Fabricate new hose using 40 1/2" piece of 303 Aeroquip hose. Install the 491-4 end fittings per the attached instructions.

4) Rotate the 90 deg elbow (MS-51504) at the inlet of the flow divider 180 deg to be pointing to the right side of the engine.

5) Use 15" piece of 601 hose to fabricate a new hose. Install the Aeroquip 816-4 fittings at each end using the attached instructions. Install the fire sleeves and clamp it after proof testing.

6) Install and tighten the AN816-4-4 fittings in the inlet side of the transducer. Install the AN 912-1 bushing into the transducer, then install the AN 823-4 45 deg. elbow in it and adjust the elbow to be pointing straight to the back.

Shadin Co., Inc.
Report: 4029
Date: Nov. 5, 1990
Rev.: A
Sec.: III.2

==========

7) Remove the crankcase bolts. Install the transducer assembly into the engine as per 4029-21 with the inlet pointing to the left, retighten, refer to Teledyne Continental Overhaul Manual for recommended torque.

8) Connect the wires to the transducers using the B-14-D wrist-locks, with plastic sleeves to insulate and secure them with tie wraps.

9) Turn the master switch on, fuel selectors on, run the booster pumps and check for leaks.

10) Start the engine and check the metered and unmetered fuel pressure. Readjust if necessary following airframe and engine manufacturer instruction.

11) Make necessary entry into the engine logs.

Shadin Co., Inc.
Report: 4029
Date: Nov. 5, 1990
Rev.: A
Sec.: III.3

==========

ASSEMBLY INSTRUCTIONS FOR 303 HOSE AND 491 FITTINGS

Step 1 Cut hose squarely to length. Use hose cut-off machine or fine tooth hacksaw. Do not remove cover.
Step 2 Place socket in vise. Do not overtighten vise on thin walled sockets of lightweight fittings. Screw hose into socket until it bottoms. Back-off 1/4 turn.
Step 3 Tighten nipple and nut on assembly mandrel.
Step 4 Lubricate inside of hose and nipple threads liberally. Use lubricating oil or light grease.
Step 5 Screw nipple into socket and hose using wrench on assembly tool hex. Nut must swivel freely when assembly tool is removed. Maximum allowable gap is 1/16 inch.
Clean, inspect, proof test (see below)

ASSEMBLY INSTRUCTIONS FOR 601 HOSE AND 816 FITTINGS

Step 1 Cut hose squarely to length. Use hose cut-off machine or fine tooth hacksaw. TO minimize wire braid flare-out, wrap hose with masking tape and saw through tape. Remove tape before step 2.
Step 2 Insert hose in socket with a twisting, pushing motion until hose is in line with back of socket threads.
Step 3 Important-mark hose position around hose at rear of socket. Use a grease pencil, painted line or tape.
Step 4 Lubricate inside of hose and nipple threads liberally. Use SAE 30 lubricating oil. Avoid getting oil in the cutting spur of the nipple.
Step 5 Carefully insert nipple and engage nipple and socket threads while holding hose in position with other hand. Make sure that hose does not push out of socket by observing mark made in step 3.
Step 6 Complete assembly using wrench while continuing to hold in position. Maximum allowable gap is .041 inches in sizes 3,4,and 5, and .031 inches in size 6 and up.
Step 7 IMPORTANT-check for hose push-out by observing hose position mark. None should be evident.
Clean, inspect, proof test (see below)

CLEAN, INSPECT, PROOF TEST

1. CLEAN...Clean hose after cutting to length. Be sure all cutting residue is dislodged. After assembly, clean each hose assembly internally using clean, dry compressed air.
2. INSPECT...Examine hose assembly internally for cut or bulged inner tube, obstructions and cleanliness. Examine Aeroquip hose assemblies with "little gem" Fittings for hose push-out.

Shadin Co., Inc.
Report: 4029
Date: Nov. 5, 1990
Rev.: A
Sec.: IV.1

TECHNICAL SPECIFICATIONS

SPECIFICATIONS

Maximum useable fuel	1800 gallons
Maximum altitude:	40,000 ft.
Operating temperature:	-30 C to 50 C
Humidity:	up to 95% @ 32 C
Accuracy:	+/- 2%
Flow Range:	.6 - 60 GPH/Engine

ELECTRICAL RATING

Input voltage:	14-28 volt D.C.
Input current:	500 ma @ 14V. or 28V. Avg.
Memory Battery (internal):	Rechargeable nickel cadmium GE 3.6V.

MECHANICAL RATING

Vibration:	5g
Weight:	Panel Unit: 1.3 lb. Transducer: App. 5 oz

TRANSDUCER SPECIFICATIONS

Model Number:	201B
Flow Range:	0.6-60 GPH
Linearity Across Flow Range, percent of reading:	+/- 1% (8-60 GPH) +/- 3% (0.6-60 GPH)
Average K Factor (pulses/Gal.):	84,000
Pressure Drop:	.3 psi @ 15 GPH 1.2 psi @ 30 GPH 2.6 psi @ 60 GPH
Working Pressure:	200 psi
Minimum Burating Pressure:	2000 psi
Temperature Range:	-65 C/125 C
Life Expectancy:	5,000 hr.

STOP

YOUR AIRCRAFT MAY HAVE OPTIONAL EQUIPMENT INSTALLED. THIS COULD CHANGE THE LENGTH OF FUEL LINES REQUIRED TO INSTALL THIS SYSTEM. PLEASE CHECK YOUR AIRCRAFT FOR PROPER LENGTH BEFORE CUTTING OR BUYING FUEL LINES.

THESE RECORDS MAY BE RELEASABLE UNDER THE FOIA REQUEST 15 DAYS AFTER SIGNATURE DATE UNLESS WE HEAR OTHERWISE FROM FAA NTSB COUNSEL

U.S. Department of Transportation
Federal Aviation Administration

Mike Monroney Aeronautical Center
P.O. Box 25082
Oklahoma City, Oklahoma 73125

Thursday, January 15, 2004

National Transportation Safety Board
Atlanta Federal Ctr, Rm 3M25, 60 Forsyth Street, SW
Atlanta, GA 30303

ACCIDENT # 0347	INDIVIDUAL#: 001	NAME: BENNAMAN, JOHN R.	MODE: AVIATION
DATE OF ACCIDENT	11/21/2003	DATE RECEIVED 12/03/2003	PUTREFACTION: No
	N # 4482S	NTSB # ATL04FA038	CAMI REF # 200300347001

LOCATION OF ACCIDENT GRIFFIN, GA

SPECIMENS Bile, Blood, Brain, Gastric, Heart, Kidney, Liver, Lung, Muscle, Spleen, Urine, Vitreous

FINAL FORENSIC TOXICOLOGY FATAL ACCIDENT REPORT

CARBON MONOXIDE: The carboxyhemoglobin (COHb) saturation is determined by spectrophotometry with a 10% cut off. Where possible, positive COHb values are confirmed by GC/TCD.

>> 13 (%) CARBON MONOXIDE detected in Blood

CYANIDE: The presence of cyanide is screened by Conway Diffusion. Positive cyanides are quantitated using spectrophotometry. The limit of quantitation of cyanide is 0.25 ug/mL. Normal blood cyanide concentrations are less than 0.15 ug/mL, while lethal concentrations are greater than 3ug/mL.

>> NO CYANIDE detected in Blood

VOLATILES: The volatile concentrations are determined by headspace gas chromatography at a cut off of 10 mg/dL. Where possible, positive ethanol values are confirmed by Radiative Energy Attenuation.

>> NO ETHANOL detected in Urine

DRUGS: Immunoassay and chromatography are used to screen for legal and illegal drugs which include: amphetamine (0.010), opiates (0.010), marihuana (0.001), cocaine (0.020), phencyclidine (0.002), benzodiazepines (0.030), barbiturates (0.060), antidepressants (0.100), antihistamines (0.020), meprobamate (0.100), methaqualone (0.100), and nicotine (0.050). The values in () are the threshold values in ug/mL used to report positive results. Values below this concentration are normally reported as not detected. GC/Mass Spec, HPLC/Mass Spec, or GC/FTIR, is used to confirm most positive results.

>> NO DRUGS LISTED ABOVE DETECTED in Urine

Dennis V. Canfield Date: 2004.01.22 15:02:59 -06'00'

Dennis Canfield, PhD.
Manager, Bioaeronautical
Sciences Research Laboratory

Osmose

December 1, 2003

Lieutenant James Landham
Griffin Police Department
868 W. Poplar St.
Griffin, GA 30223

Lieutenant Landham:

I, Norma B. Jones, being receptionist for:

Osmose, Inc.
1016 Everee Inn Rd.
Griffin, GA 30224
[redacted]

Wish to make the following statement concerning the airplane crash at Stowe-Woodward on Friday, November 21, 2003, at approximately 1 o'clock or a bit thereafter (I never looked at the clock).

I first thought I heard a freight train (loud noise), then looking up from our switchboard here in the Osmose lobby I actually saw the plane on impact. Next it looked like an explosion (fire and smoke) in the sky. Did nothing more than actually saw the plane on impact.

Respectfully,

Norma B. Jones

Norma B. Jones

Randy Uecker
[redacted]

Osmose
1016 Everee Inn Rd.
Griffin, GA 30224
[redacted]

It was Friday 21, 2003 and a clear/cool day. Our company (Osmose) was having a luncheon for the employees out at the warehouse, which sits just at the end of the runway. I was late getting out there (just after 12:30). Most of the folks were already in the warehouse where the tables had been set. Since it was crowded, I found a nice spot outside in the sun. I was about 12 yards from the road (Ann St.) sitting at the end of a 3 ft.-high dividing wall. I was chatting with 2 others. Our conversation was in it's final words when the aircraft was rolling on the runway (at this moment - unnoticed). The other 2 guys had gathered their empty plates and were walking toward the warehouse as I looked up at the plane. The wonderful roar of the twin engines buzzing 100 ft. above my right shoulder just grabbed my attention. It was "just another take-off". Routine. Just like all the others I had seen in years past... The nose-up attitude was "normal" and nothing seemed like it was being "strained" or "bogged-down"... all was at full power. I saw that it was indeed a twin. It was light in color, either white or an off-white. I do not recall seeing any landing gear. Then, just as it had passed myself and was now even with our office building, one of the engines coughed (a kind of loud "Poof", not a "Bang") and immediately started sputtering. I do not remember hearing any pitch or power changes as the plane continued on. As the sputtering started, the plane started to roll to the left. At this point, I believe the craft to be somewhere between 100 and 200 ft. AGL. My first thought was that the pilot may be trying to turn back to the field for a landing. There were tall bushes in my line of sight, but I could see past (through) them. I was focused on the outline of the aircraft. The plane was obviously losing altitude and continued to turn slowly left. It looked to me that just before impact that the craft was mostly stalled. There were no abrupt movements to "stabilize" the aircraft, though it seemed to be leveling "some" (no longer rolling left). It was still in a left-wing-low and a nose-up attitude when it impacted. From my vantage point, I thought the plane had just cleared the building... I thought it crashed just behind the Stowe-Woodward Plant. Only a couple of seconds went by and there was already a large black plume of smoke rising skyward. Myself and several others sprinted toward the crash site. As I was running across our front parking lot is when I realized that it was on top of the Stowe-Woodward building.

Randy Uecker

Date: 12-1-03

Randy Uecker

I had just clocked in from lunch at appox. 1 p.m. and was standing in the parking lot when I heard a aircraft taking off. The engine was sputtering. As I continued to watch the plane gained a little altitude, then banked to the left as it was losing altitude. The plane disappeared behind the tree line and a huge explosion followed.

Brian Oldham
Brian Oldham
Atlanta Air Recovery

I just clocked in from lunch, when I noticed an airplane taking off. It caught my attention because of the sputtering engine. The plane gained little altitude before banking to the left and disappearing behind the tree line into a big explosion.

Steven M. Poss
Atlanta Air Recovery

Form # CTI-006C (WO Report)

CUSTOMER WORK ORDER REPORT

GARDNER AVIATION SPECIALIST, INC.

WO # 19054-AI Task 3 AV pg 1

FAA Certified Repair Station # [redacted]

Cust Code: STJE **Phone:** [redacted]

JERRY STEELE DEVELOPMENT CO.
3786 HWY 20 EAST
MCDONOUGH, GA 30253 USA

Item			
Part #			
Model			
Serial #			
Mfgr.			
Discrep.	INSTALL SHADIN FUEL FLOW		

A/C Tail #	N4482S		
A/C Make	BEECH		
A/C Model	95-B55	**Ser#**	TC-1882
Job Status	OPENED		
Job type	STANDARD		
Open Date	Oct-02-2003 Thursday		
Promised			
Started	Nov-05-2003 Wednesday		
Finished			
Printed	Nov-22-2003 Saturday 11:01		

Discrepancy & Corrective Action

REMOVED TU028 FUEL FLOW INDICATOR.
INSTALLED SHADIN DIGIFLO-L FUEL FLOW INDICATOR PN:910532P SN:4888 AND FUEL FLOW TRANSDUCERS PN:68050-A1 SN:130436 AND SN:130437.INTERFACED THE INDICATOR TO THE GARMIN GNS430.INSTALLED THIS SYSTEM IN ACCORDANCE WITH SHADIN REPORT# 4036 DATED SEPT 10,1986 AND STC# SA579GL. INSTALLED FUEL FLOW TRANSDUCERS IN ACCORDANCE WITH SHADIN REPORT# 4029 DATED NOV 5,1990 AND STC# SE552GL.NOTE: THAT THE K FACTOR IS SET AT 29.8.COMPLETED FAA FORM 337.

Labor Date	Empl	Description	Hrs
13Nov2003 Thu	JHICKS		1.00 RG
13Nov2003 Thu	JHICKS		1.00 RG
13Nov2003 Thu	JHICKS		0.60 RG
11Nov2003 Tue	JHICKS		2.00 RG
14Nov2003 Fri	JHICKS		6.50 RG
17Nov2003 Mon	JHICKS		2.60 RG
17Nov2003 Mon	FRANK		8.00 RG
17Nov2003 Mon	ALRU		2.30 RG
17Nov2003 Mon	JHICKS		2.80 RG
18Nov2003 Tue	FRANK		4.10 RG
18Nov2003 Tue	FRANK		2.90 RG
19Nov2003 Wed	ALRU		1.00 RG

Equip Model	Description	Qty
910532P \ 4888	SHADIN DIGIFLO-L	1
KIT A-1 \ 130436	FUEL TRANSDUCER	1
KIT A-1 \ 130437	FUEL TRANSDUCER	1

Part Number Used	SKU	Description	Qty
IK-9337	18767	INST KIT	1.00
491-4	3821	FITTING	6.00
816-4	4908	FITTINGS	6.00
AN912-1	18802		4.00
7277-2-2	4647	CIRCUIT BREAKER	1.00
7277-2-7-1/2	4652	CIRCUIT BREAKER	1.00
225554-6	2566	90 DEGREE TNC, RG142-400	1.00
UG88	17024	CONNECTOR BNC DUAL CRIMP MALE	2.00
UG89	18728	CONNECTOR BNC DUAL CRIMP FEMAL	1.00

Other type	Description	Qty
SHIP UPS NDA	FROM EDMO	1.00
SHIP UPS NDA	FROM SHADDIN	1.00
SHIP UPS NDA	FROM EDMO	1.00

MAINTENANCE RELEASE / RETURN TO SERVICE CRS# G3SR222J

The aircraft, airframe, engine, or appliance identified above was repaired and inspected in accordance with current regulations of the FAA and is approved for return to service.

Inspector / Authorized Signature _____ Certificate # _____ Date _____

PART NUMBER: 910532P

SERIAL NUMBER: 4888

INVOICE NUMBER: 758902

DATE: 11-06-03

L: 29.8 Left K-Factor (where XXXXXX is valid from 0 to 20,000. These are in 10's. A setting of 1234 would be a K-Factor of 12,340)

R(r): 29.8 Right K-Factor

U

Units:
0 = Gallons ✓
1 = Liters
2 = Lbs 5.8
3 = Lbs 6.7
4 = Kilograms
5 = Lbs 6.5
6 = Lbs 6.35

E

Engine Type:
0 = Single Engine
1 = Twin Engine ✓

O

Output Type:
0 = Off
1 = King
2 = AirData
3 = Arnav
4 = Trimble
5 = Garmin ✓

I

Loran Input:
0 = Off
1 = On ✓

F

Filter Type:
0 = Injector ✓
1 = Carburetor

★★★★ ATTENTION ★★★★

1. It is the responsibility of the installing agency to verify the settings of Shadin Fuel Flow Systems and or Air Data Computers.
2. The installation of other then Shadin approved parts is possibly an unapproved installation and may not be covered under warranty.

NOTES:

1. ALL LINEAR DIMENSIONS ARE REFERENCE ONLY.
2. TO INSTALL FITTINGS, APPLY THREAD SEALANT IN ACCORDANCE WITH AC 43.13. TORQUE FITTINGS TO 15 FT-LBS MAX. DO NOT USE TEFLON TAPE.
3. INSTALL TRANSDUCER IN HORIZONTAL POSITION WITH WIRES ON TOP.
4. REFER TO KIT A-1 PARTS LIST.

WIRE TABLE	
COLOR	SIGNAL NAME
BLACK	GROUND
WHITE	SIGNAL
RED	POWER 12VDC

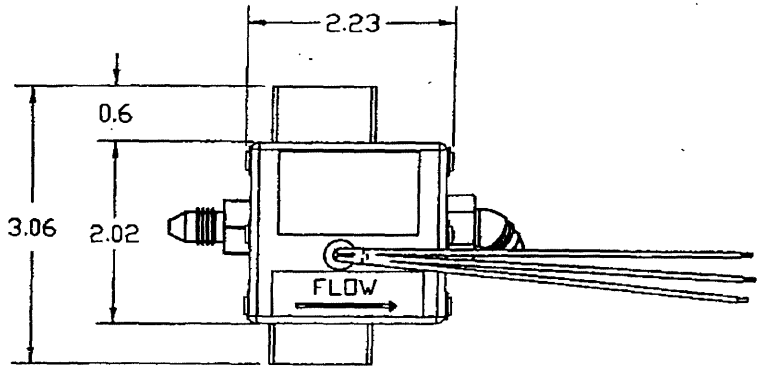

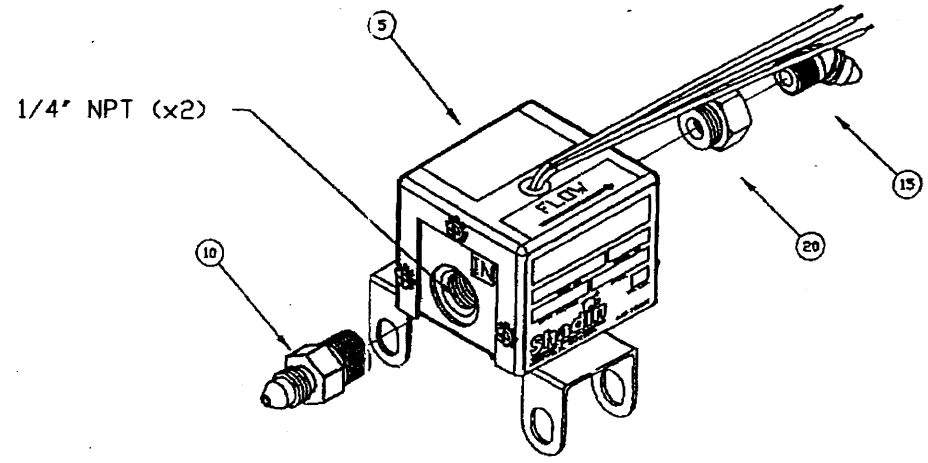

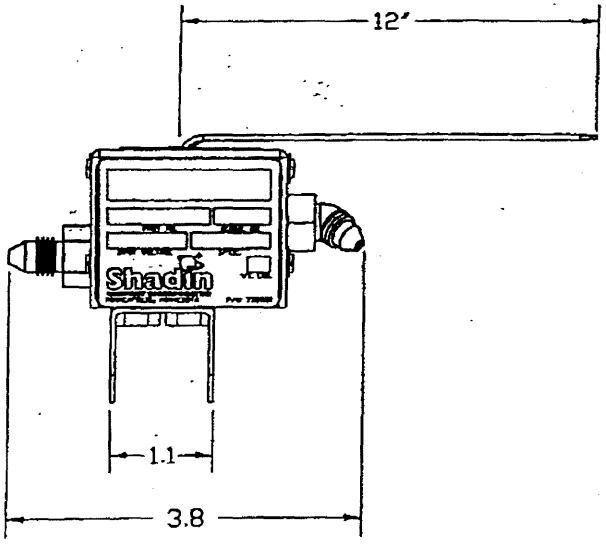

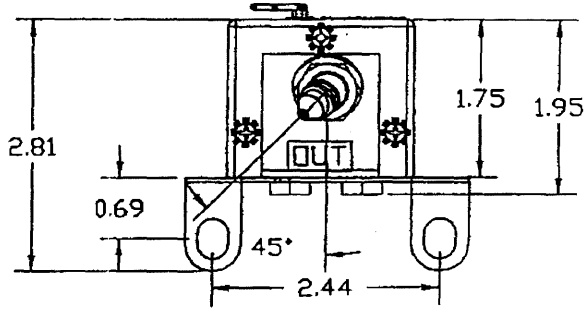

ECO #	REV.	DATE	BY	APP'D	DESCRIPTION
0208/014	-	9-19-02	PAB	PJD	BASELINE RELEASE

UNLESS OTHERWISE NOTED DIMENSIONS ARE IN INCHES TOLERANCES: ∠ ± 20°

FINISH: N/A

MATERIAL: N/A

SCALE: NONE

DRAWING DATE 9/17/02
DRAFTER PAB
APPROVED PJD
FILE NAME KIT A1-.DWG
DIRECTORY INSTALL KITS
SHEET 1 OF 1

SHADIN CO., INC. MINNEAPOLIS, MN 55426

INSTALL DWG, KIT A1, 680501A

DRAWING NO. 4005-E34 | SIZE A | P/N KIT A1 | REV —

NOTES:

1. ALL LINEAR DIMENSIONS ARE REFERENCE ONLY.
2. TO INSTALL FITTINGS, APPLY THREAD SEALANT IN ACCORDANCE WITH AC 43.13. TORQUE FITTINGS TO 15 FT-LBS MAX. DO NOT USE TEFLON TAPE.
3. INSTALL TRANSDUCER IN HORIZONTAL POSITION WITH WIRES ON TOP.
4. REFER TO KIT A-1 PARTS LIST.

WIRE TABLE	
COLOR	SIGNAL NAME
BLACK	GROUND
WHITE	SIGNAL
RED	POWER 12VDC

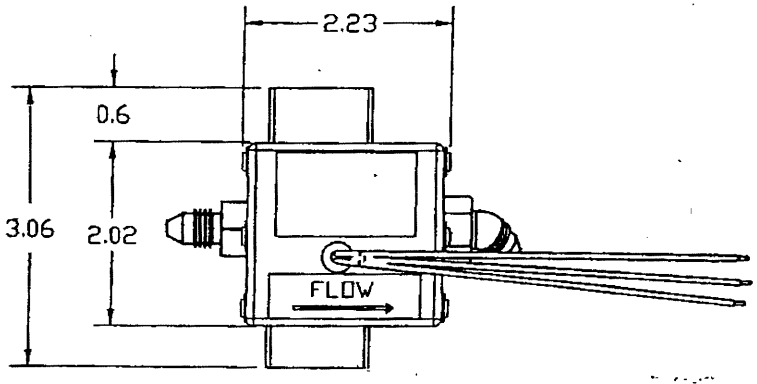

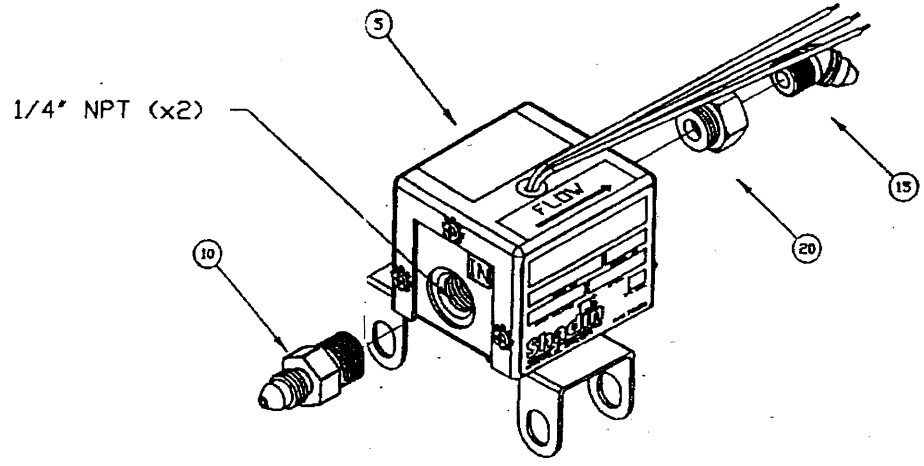

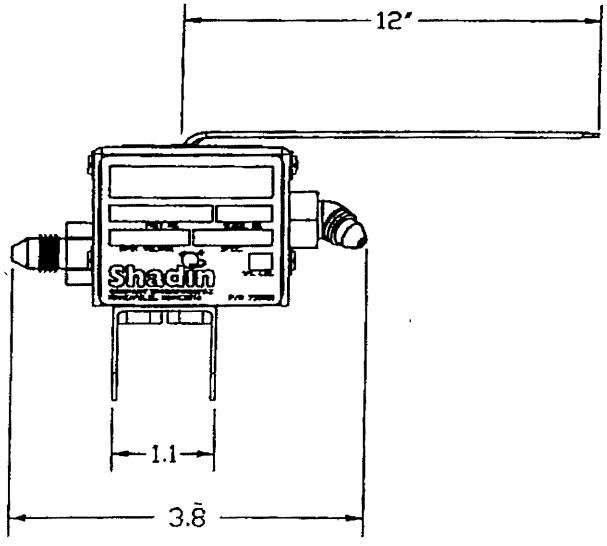

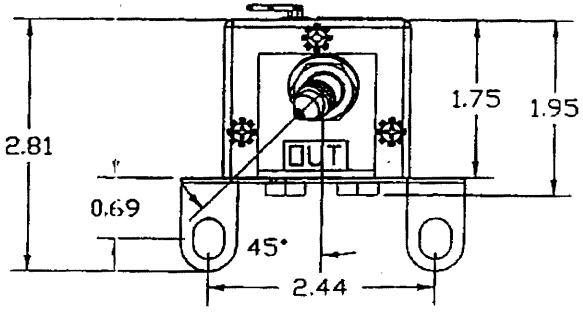

ECO #	REV.	DATE	BY	APP'D	DESCRIPTION
0208/014	-	9-19-02	PAB	PJD	BASELINE RELEASE

UNLESS OTHERWISE NOTED DIMENSIONS ARE IN INCHES TOLERANCES: ∠ ± 20° (1)

FINISH: N/A

MATERIAL: N/A

SCALE: NONE

DRAWING DATE 9/17/02

DRAFTER PAB

APPROVED PJD

FILE NAME KIT A1-J.DWG

DIRECTORY INSTALL KITS

SHEET 1 OF 1

SHADIN CO., INC. MINNEAPOLIS, MN 55426

INSTALL DWG, KIT A1, 680501A

DRAWING NO. 4005-E34

SIZE A

P/N KIT A1

REV —

National Transportation Safety Board
RELEASE OF AIRCRAFT WRECKAGE

ACCIDENT IDENTIFICATION NUMBER: ATL-04-F-A038

PART 1 -- RELEASE OF AIRCRAFT WRECKAGE

REGISTERED OWNER (name and address)	REGISTRATION NUMBER – N
International Loss Management 35 Technology Parkway South Norcross GA 30092	4482S
	MAKE: BE-95

MODEL	DATE OF ACCIDENT	LOCATION
Beech	11/23/03	Griffin, GA

The Natinal Transportation Safety Board has [X] has not [ ] completed its investigation of the aircraft wreckage described above. All wreckage except that listed on the reverse side is hereby released to the registered owner, or owner's representative, for appropriate disposition. (If no parts are retained, insert NONE.)

SIGNATURE OF NTSB REPRESENTATIVE	TITLE	DATE
[signature]	Aviation Safety Investigator	07/02/04

(This section may be signed by a person, not the owner's representative, who has the knowledge of the disposition of the wreckage and its parts. Such signature does not place a responsibility for disposition of the wreckage upon that person.)

I HEREBY ACKNOWLEDGE:

[X] Receipt of the above described aircraft wreckage.

[X] Removal of the parts, if any, listed on the reverse side of this form.

SIGNATURE	TITLE	DATE
[signature]	For underwriters	7/5/04

REMARKS

Received, as released by the NTSB. Parts and wreckage have not been inventoried.

National Transportation Safety Board
RECEIPT OF AIRCRAFT PARTS

ACCIDENT IDENTIFICATION NUMBER: ATL-04-F-A038

PART II -- RELEASE OF AIRCRAFT PARTS

REGISTRATION NUMBER	MAKE	MODEL
4482S	BE-95	Beech

DATE OF ACCIDENT	LOCATION
11/23/03	Griffin, GA

The National Transportation Safety Board has retained, for further examination, those parts, pieces, or components listed below. When the examination is complete, they will be returned to:

OWNER OR OWNER'S REPRESENTATIVE -- International Loss Management

ADDRESS 35 Technology Parkway South Norcross GA 30092

PARTS, PIECES, OR COMPONENTS RETAINED:

Propeller Left PNC-C34F-2UF
SN- EB5395B

Propeller Right PNC-C34F-2UF
EB5396B

SIGNATURE OF NTSB REPRESENTATIVE	TITLE	DATE
	Aviation Safety Investigator	07/02/04

The registered owner or owner's representative will acknowledge receipt of the material by signing this form in the spaces designated

SIGNATURE OF OWNER OR OWNER'S REPRESENTATIVE	TITLE	DATE
ADDRESS		

ENGINE FAILURE AFTER LIFT-OFF
AND IN FLIGHT

An immediate landing is advisable regardless of take-off weight. Continued flight cannot be assured if take-off weight exceeds the weight determined from the TAKE-OFF WEIGHT graph. Higher take-off weights will result in a loss of altitude while retracting the landing gear and feathering the propeller. Continued flight requires immediate pilot response to the following procedures.

1. Landing Gear and Flaps - UP
2. Throttle (inoperative engine) - CLOSED
3. Propeller (inoperative engine) - FEATHER
4. Power (operative engine) - AS REQUIRED
5. Airspeed - MAINTAIN SPEED AT ENGINE FAILURE (100 KTS (115 MPH) MAX.) UNTIL OBSTACLES ARE CLEARED

After positive control of the airplane is established:

6. Secure inoperative engine:
   a. Mixture Control - IDLE CUT-OFF
   b. Fuel Selector - OFF
   c. Fuel Boost Pump - OFF
   d. Magneto/Start Switch - OFF
   e. Generator/Alternator Switch - OFF
   f. Cowl Flap - CLOSED
7. Electrical Load - MONITOR (Maximum load of 1.0 on remaining engine)

NOTE

The most important aspect of engine failure is the necessity to maintain lateral and directional control. If airspeed is below 78 kts (90 mph), reduce power on the operative engine as required to maintain control.

Washington, DC 20594

Brief of Accident

Adopted 9/13/2005

ATL04FA038
File No. 18063 | 11/21/2003 | Griffin, GA | Aircraft Reg No. N4482S | Time (Local): 12:45 EST

Make/Model:	Beech / 55
Engine Make/Model:	Continental / IO-470L-21B
Aircraft Damage:	Destroyed
Number of Engines:	2
Operating Certificate(s):	None
Type of Flight Operation:	Flight Test
Reg. Flight Conducted Under:	Part 91: General Aviation

	Fatal	Serious	Minor/None
Crew	1	0	0
Pass	0	0	0

Last Depart. Point:	Same as Accident
Destination:	Griffin, GA
Airport Proximity:	Off Airport/Airstrip

Condition of Light:	Day
Weather Info Src:	Weather Observation Facility
Basic Weather:	Visual Meteorological Cond
Lowest Ceiling:	None
Visibility:	10.00 SM
Wind Dir/Speed:	Calm
Temperature (°C):	22
Obstr to Vision:	No Obscuration; No Precipitation
Precipitation:	

Pilot-in-Command Age: 47

Certificate(s)/Rating(s)
Commercial; Multi-engine Land; Single-engine Land; Glider
Instrument Ratings
Airplane

Flight Time (Hours)

Total All Aircraft:	2500
Last 90 Days:	50
Total Make/Model:	Unk/Nr
Total Instrument Time:	400

According to the company's chief maintenance inspector, the purpose of the flight was to conduct a maintenance test flight of the airplane on recently installed equipment the pilot/ mechanic had just completed. Before engine start-up the pilot/ mechanic conducted a pre-flight of the airplane, and then taxied out to the ramp and ran the engine up to full rpm three consecutive times before the test flight. The pilot taxied to runway 32, and proceeded to add full power for take-off. As the airplane began to rotate for climb out the engines sounded like they began to "backfire". The engines continued to make this sound as it climbed out. The airplane climbed approximately 200 feet and the left wing pitch down. The airplane descended under the tree line and a "loud explosion" was heard. The airplane collided with a building a quarter mile from the departure end of runway 32. Post-accident examination of the cabin section, main fuselage, and wing assemblies revealed that they were fire damaged. All flight control and communication instruments were fire damaged. Post-accident examination of blades from both propeller assemblies revealed rotational scoring. Post-accident examination of the propellers revealed both propellers were rotating and not in the feathered position. There were no pre-impact mechanical anomalies noted with the propeller blades. Review of the maintenance work order revealed that a Shadin Digilfo-L fuel flow indicator and fuel flow transducers on the right and left engines were installed by the pilot/mechanic prior to the flight. Post-accident examination of left fuel flow transducer serial number 130436 revealed it was charred, and the inlet hose coupler was not as tight as the outlet hose coupler. Fuel was poured into the inlet side of the transducer, and the outlet flow was restricted. The fitting on the inlet side was removed and the inlet was inspected. Debris was found around the inlet orifice. . After removing the debris from the Fuel flow transducer, fuel was again poured into the inlet and fuel exited the outlet without restriction to flow. Post examination of the right fuel flow transducer serial number 130437 revealed it was intact with no visible damage, and both hose couplers were tight. Fuel was poured into the inlet side of the transducer, and the fuel exited the outlet side of the transducer without visible restriction to flow.

Occurrence #1: LOSS OF ENGINE POWER
Phase of Operation: TAKEOFF - INITIAL CLIMB

Findings
1. ALL ENGINES
2. (F) MAINTENANCE,MODIFICATION - IMPROPER - PILOT IN COMMAND
3. (F) FUEL SYSTEM,LINE - BLOCKED(PARTIAL)
4. (F) FUEL SYSTEM - STARVATION

Occurrence #2: FORCED LANDING
Phase of Operation: DESCENT - EMERGENCY

Occurrence #3: LOSS OF CONTROL - IN FLIGHT
Phase of Operation: DESCENT - EMERGENCY

Findings
5. (C) PROCEDURES/DIRECTIVES - NOT FOLLOWED - PILOT IN COMMAND
6. (C) PROPELLER FEATHERING - NOT PERFORMED - PILOT IN COMMAND

Occurrence #4: IN FLIGHT COLLISION WITH OBJECT
Phase of Operation: DESCENT - UNCONTROLLED

Findings
7. OBJECT - BUILDING(NONRESIDENTIAL)

Findings Legend: (C) = Cause, (F) = Factor

The National Transportation Safety Board determines the probable cause(s) of this accident as follows.
A loss of engine power due to the pilot's failure to follow the engine failure after liftoff emergency procedure to feather the left engine propeller resulting in a loss of control during climbout, and the subsequent collision with a commercial building. A factor was the fuel starvation of the left engine due to debris in the fuel line.